UV meter UVC-02
MANUAL

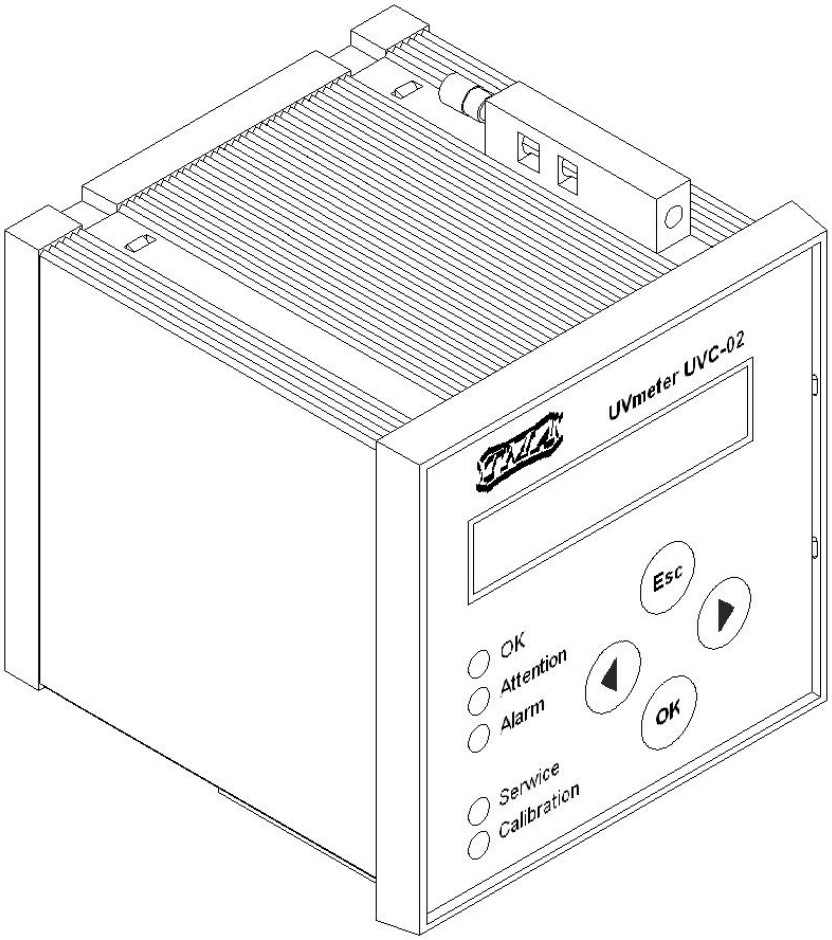

Table of contents

User safety

WARNING

This device may only be operated and installed by qualified personnel. Before installation, servicing or repairs verify the qualifications of personnel and limit these activities to such personnel. Any activities on this device can only proceed after thorough familiarization with this instruction. Noncompliance with the precautions listed hereon might expose personnel to serious bodily harm (damage to human skin from UV radiation), or damage to the device alone. The manufacturer, TMA, is not responsible for damage to the device caused by improper installation, maintenance and operation.

1. **READ THE MANUAL.**

Before proceeding with any activity with the sterilizers read the manual.

2. **RETAIN THE MANUAL.**

Retain the manual for reference during the whole time the device is in operation.
All precautions and warnings shall be obeyed by the user at all times during the operation of the device.

3. **POWER SUPPLY.**

Device is exclusively designed to be supplied from 220-230V 50Hz mains. It shall be installed and grounded in accordance with this manual and the local electrical code.
To guard against electrical shock, unplug the device every time work is to be done on it.

4. **GROUNDING.**

Operation of the device without connected grounding is inadmissible. Ungrounded operation might lead to occurrence of electrical shock and serious bodily harm with death included.

5. **ULTRAVIOLET RADIATION.**

Direct exposure to UV radiation is harmful to human skin and sight.
As a result of direct UV radiation, reddening of skin, serious burns or ultimately loss of eyesight may occur (depending on the time of exposure).
In such cases one shall contact physician as soon as possible.

1 METER DESCRIPTION

1.1 Front panel

1	**Display**	Alphanumeric 2x16 digits		
2	**OK**	Green LED	ON	The device works properly.
3	**Attention**	Yellow LED	flickers	Low radiation level.
			Short audible signals	It is advised to inform the service about the need to clean quartz sleeves or change the UV lamps.
4	**Alarm**	Red LED	ON	Critical radiation level.
			Continuous audible signal	Immediate service intervention required. **EFFICIENCY OF STERILIZATION IS LIMITED.**
5	**Service**	Yellow LED	ON	The meter is in setting mode.
			Enter and exit – 3 short audible signals	After 2 idle minutes, diode starts to flicker. After 1 more idle minute, the device leaves "Service" mode **Changes are not saved!**
6	**Calibration**	Red LED	ON	Calibration in process. Duration – 1 hour.
			1 long audible signal	Calibration finished.
7	**Esc**	In programming mode – return to higher level In setting parameters mode – exit without saving. Using "Esc" button to exit "Service" does not save changes.		
8	← →	Change of value of a given option. Browse menu at the same level.		
9	**OK**	Return to higher level with saving changes. Enter lower lever to perform changes.		

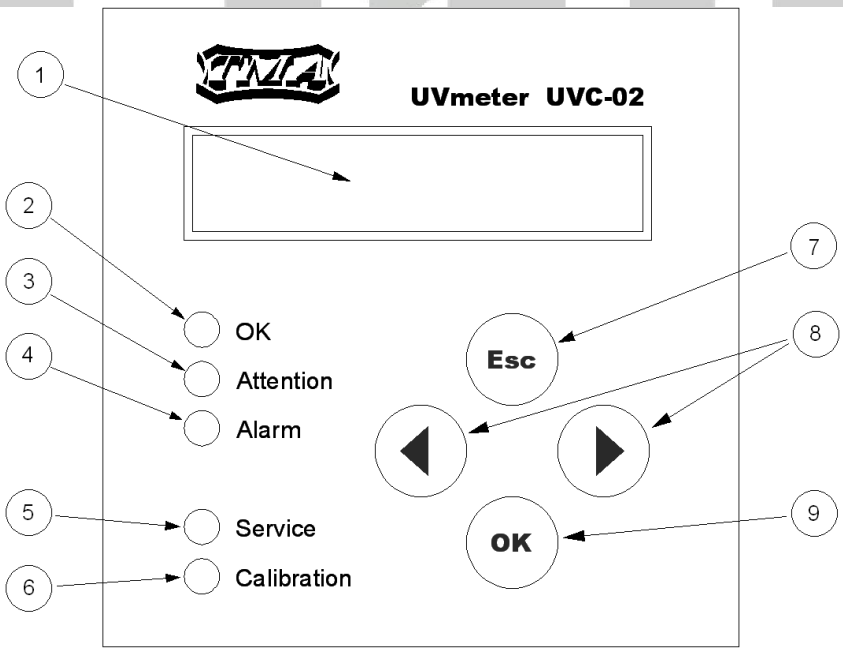

Figure 1 – front panel

1.2 Rear panel connectors

On the rear panel there are push-wire connectors to connect power 230 V AC, transmitters outputs, digital interface RS232/USB and UV sensor.

To connect any stiff wire (or one fitted with a wire sleeve) it is enough to push it into the connector. Disassembling (disconnecting) of the wires is done by pressing the orange lever (placed over each connector) with a screw driver and pulling out the wire. The wires are numbered according to the figures on the rear panel and their colours are described in the manual.

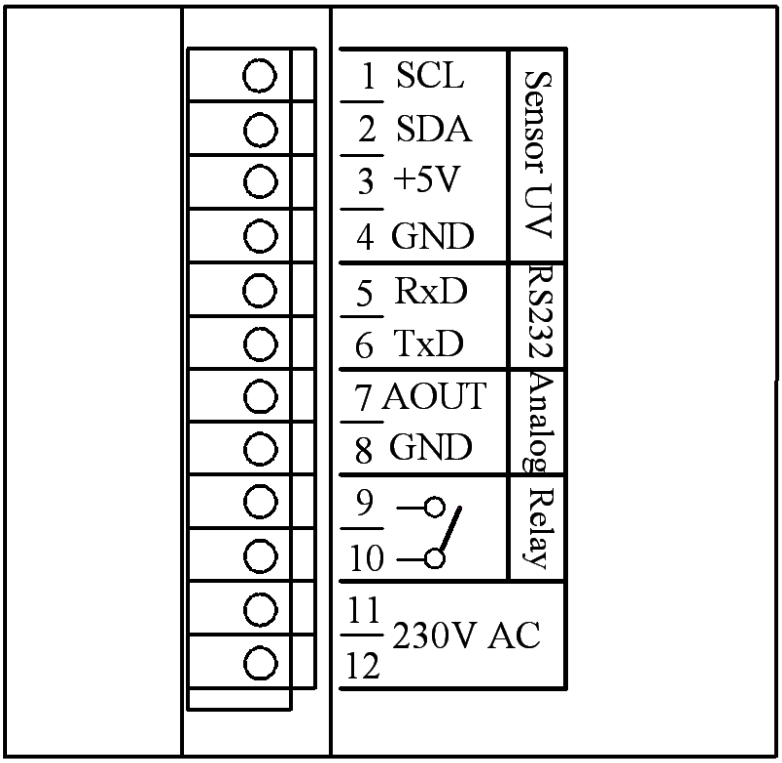

Figure 2 – rear panel connectors

1 – **SCL** – transmission synchronization dial signal output
2 – **SDA** – series data signal
3 – **+5V** – power connection
4 – **GND** – grounding of the UV meter (and RS232 interface - optional)
5 – **RxD** – RS232 interface input - optional
6 – **TxD** – RS232 interface output - optional
7 – **AOUT** – analog signal output – optional
8 – **GND** – analog output grounding
9, 10 – transmitter contacts output (max voltage 6A/230V)
11, 12 – UV meter power input 230V AC

2 CONNECTING THE METER

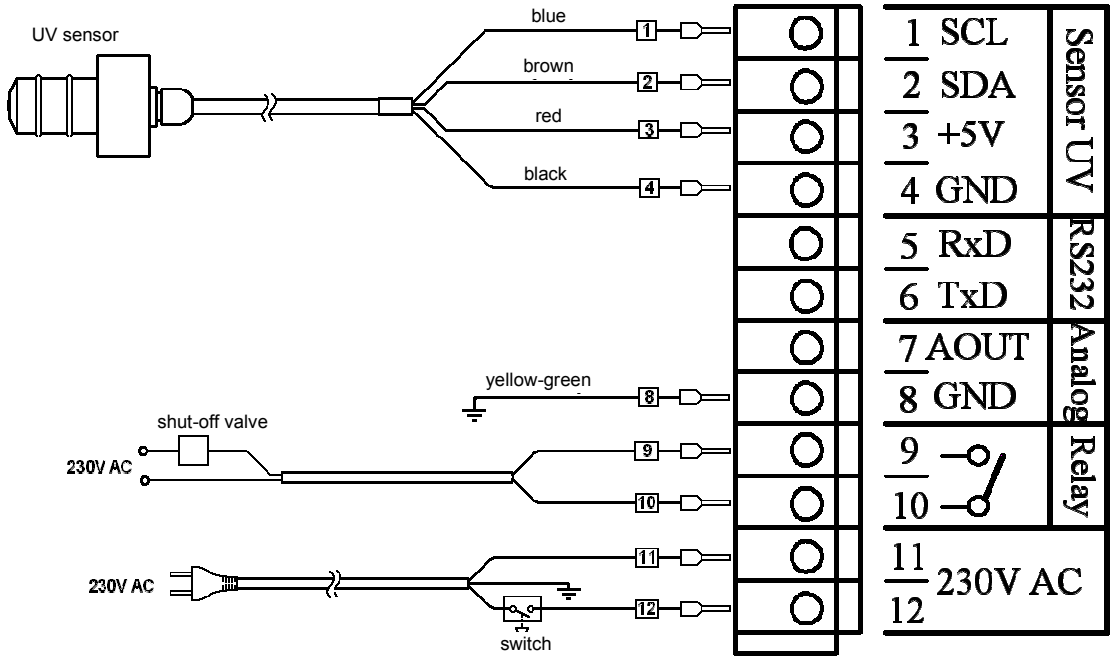

Figure 3 – Basic UV meter version connection

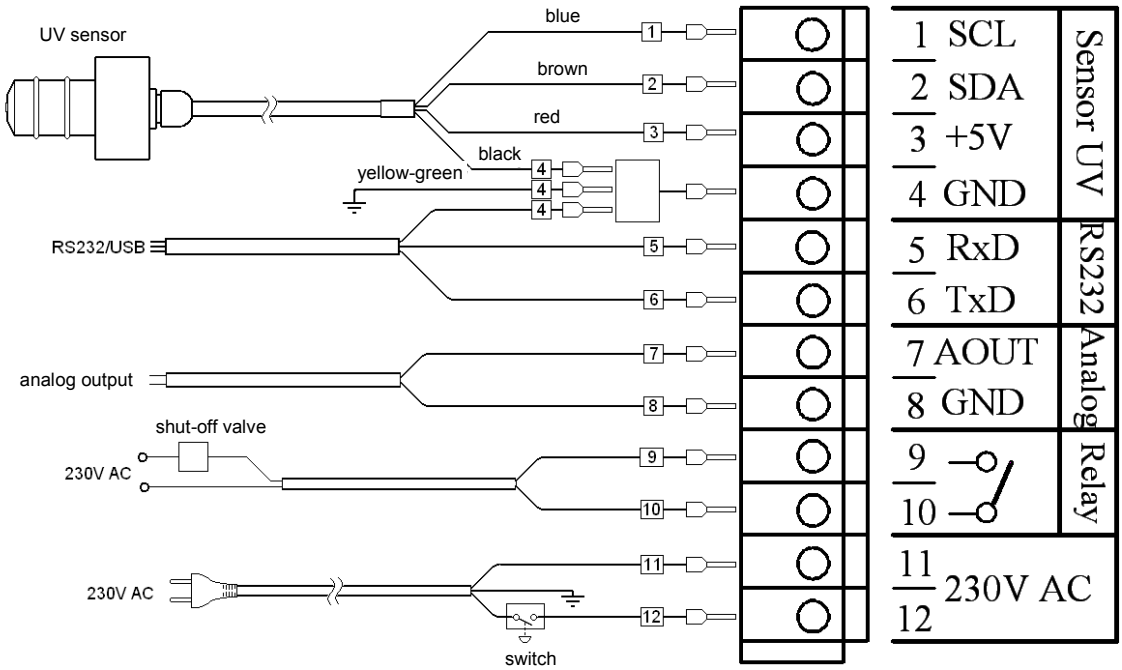

Figure 4 – Connection of UV meter with analog interface and RS232 (optional). Connect the connector no. 4 to 3-conductor terminal block WAGO . Other parameters as in the basic version.

3 PROGRAMMING THE METER

The UV meter works in automatic mode.

Autocalibration is required before the first start up of the meter and after replacing the UV lamps. It should be performed **only** in these cases.

Performing autocalibration in other cases results in falsification of the parameters and incorrect values being displayed.

3.1 Setup menu

The meter is equipped with membrane keyboard with microswitches. This type of keyboard ensures tightness and high durability. Each pressing of a key is confirmed by a short audible signal.

Principle of operation:

- Enter **Service** mode by pressing **OK** and **ESC** keys for 5 seconds (it prevents accidental access);
- Use **<** and **>**' keys to move further or back in menu options;
- To enter each option press **OK**;
- To save changes press **OK**;
- To leave without saving changes press **ESC**;
- To increase or decrease the set value use **<** or **>** keys;
- To move back from options (e.g. **Language**, **Alarm level**, **Autocalibration**) to starting **Service** mode press **ESC** once;
- To leave **Service** mode with saving changes press **OK**, without saving - press **ESC**;
- After no activity in **Service** mode (not pressing any keys) for 3 minutes, the meter leaves the procedure.

!!! WARNING !!!

In case of no reaction from the user (not pressing any keys) for 3 minutes, the meter automatically leaves the setting mode <u>not saving the set changes!.</u> The intention to leave the setting mode is signalled by flickering yellow LED on the front panel after 2 idle minutes. If a button is pressed within 1 minute, the meter remains in the setting mode.

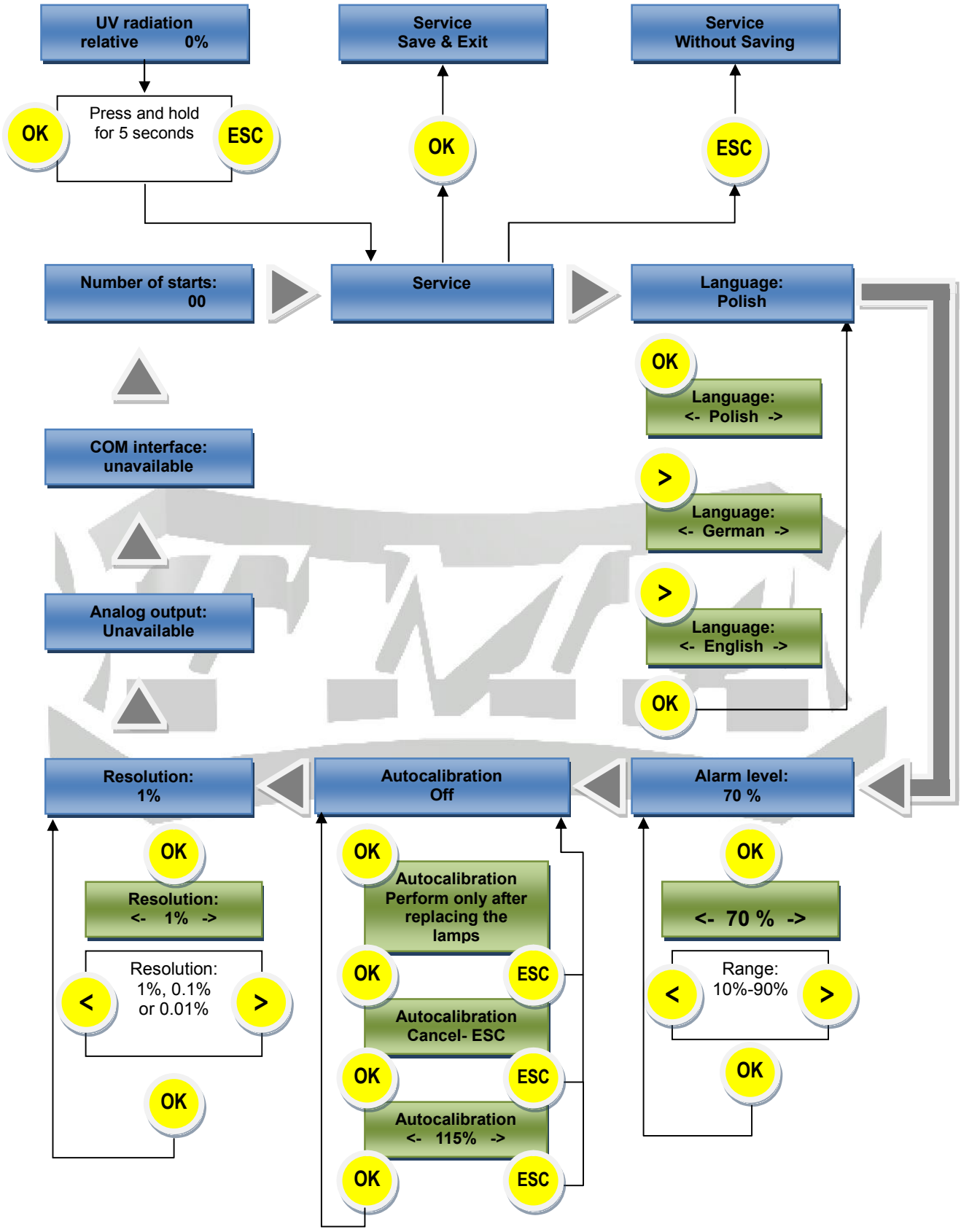
UV radiation relative 0%
Press and hold for 5 seconds
OK
ESC
Service Save & Exit
OK
Service Without Saving
ESC
Number of starts: 00
Service
Language: Polish
OK
Language: <- Polish ->
>
Language: <- German ->
>
Language: <- English ->
OK
COM interface: unavailable
Analog output: Unavailable
Resolution: 1%
OK
Resolution: <- 1% ->
<
Resolution: 1%, 0.1% or 0.01%
>
OK
Autocalibration Off
OK
Autocalibration Perform only after replacing the lamps
OK
ESC
Autocalibration Cancel- ESC
OK
ESC
Autocalibration <- 115% ->
OK
ESC
Alarm level: 70 %
OK
<- 70 % ->
<
Range: 10%-90%
>
OK

3.2 Setting the language

In the basic version 3 languages are available: English, Polish and German. Select the language in the main menu by entering **Language/Język/Schprechen** function – press **OK** and use **<** and **>** keys to set the right language. Press **OK** to accept the setting or press **ESC** to leave the option without changing the parameters. After the language is accepted, the change is instant and all other changes will be performed in the chosen language. For the change to be permanent, save the changes when leaving **Service** mode.

3.3 Setting alarm level

The alarm can be set in the range 11-90% with 1% resolution. Lowering the alarm level to 10% will turn off the alarm completely: no audible or optical signal (**OK**, **Attention** and **Alarm** LED switched off) and transmitter contacts closed, regardless of the level of UV radiation. The transmitter will only signal the work of the sterilizer (after the device is switched off the contacts are open).

There are 3 signalling options with the alarm switched on:

Proper work	Continuous glow of the green **OK** LED	Te level of radiation higher than the preset value by more than 5%.
Warning	Intermittent audible signal. Continuous glow of the yellow **Attention** LED	Signals the approach to the alarm level. The transmitter will be connected if the level of radiation does not drop below the preset level.
Alarm	Continuous audible signal, continuous glow of the red **Alarm** LED	The transmitter is disconnected. It will connect only after the level of radiation reaches 5% higher than the preset level.

3.4 Autocalibration

!!! WARNING !!!

Autocalibration of the meter should be performed only after replacing the lamps! Autocalibration resets the UV lamp starts counter! After performing the calibration, the meter or the lamps should not be taken out or moved!

The function of the calibration is to set a required level of radiation in percentage, for the currently measured value, after the heat conditions of the lamp are stabilized. Calibration should be performed only after replacing the lamps! The level of radiation can be set in the range 30% - 120% with resolution of 1%.

In initial work period (800-1000h), new UV lamps tend to emit from 15 to 20% (depending on the type) more radiation (with fast drop) in relation to nominal parameters. After this period, the radiation stabilizes showing slow decrease in time. Because of this, the preset value is higher than 100% and should be in accordance with the recommendations of the producer of the sterilizer.

Autocalibration is performed in three stages. After setting the level of calibration and leaving **Service** mode with saving changes, during the first few seconds a number of measurements take place, the needed input amplifier amplification is determined and the measured value is calculated to conform to the calibrated value. After this time, the meter should indicate the value close to the preset value. Then, the meter performs measurements for 1 hour (to stabilize the work condition's temperature) and after this time, performs final calibration. If the process of calibration has not been finished by switching off the device or voltage drop, the meter will resume the whole calibration cycle automatically after the device is on again. The meter may refuse autocalibration when the level of radiation is close to zero, which is communicated on the display and with audible signal.

During the whole process of calibration, the red **Calibration** LED flickers.

If there is a need to remove or change the position of the UV lamp (not advised), the displayed value of calibration and the number of starts of the sterilizer should be written down in advance. After the service is performed, if the stabilized value differs from the previous value by more than 1%, the meter can be calibrated to the previous value (with 1% accuracy).
The number of starts cannot be corrected – it will be reset after calibration.

3.5 Resolution of displayed measurements

The measurements are performed by a digital sensor. For standard measurements, the advised resolution is 1% or 0.1% - if the sterilizer works in stable conditions. Resolution 0.01% is for measuring in laboratory conditions with supply voltage stabilization.

3.6 Analog signal output (4-20mA, 0-20mA, 0-10V)

It is an optional output of the measuring signal of the transducer.

3.7 Digital interface (RS232/USB)

It is an optional output of the measuring signal of the transducer.

3.8 UV lamp starts counter

The life of UV lamps is affected by the number of starts (high voltage and currents at start ups damage the electrodes). The starts counter is an additional indicator of the cause of early burnout of the lamps, after eliminating the mechanical reasons (quartz sleeve and sensor's sight glass deposits). The counter cannot be set. It is reset during calibration. It is for reading purposes only.

4 WARNINGS AND NOTES

– After start up, the meter displays **Initialization** and restarts every 2s with short audible signal – meter and sensor communication failure. Sensor is not connected or badly connected – check all wire connections.

– After start up, the meter displays **Continue calibration** – the calibration is not finished and the process starts again with previous settings. The sterilizer has been switched off or there was a voltage drop before the end of calibration.

– After the initialization or continuation of the calibration, the meter displays **No UV radiation calibr. aborted** – calibration cannot be performed because the minimal UV radiation level has not been reached. Check the UV lamp.

– During measurement, the meter displays **UV radiation relative: range** – UV radiation level has reached more than 30% over the calibrated level (e.g. calibration was set for 115%, so the level has reached min. 149,5%). Initial amplification is set in such a way as to enable the increase of measured value from 30% to 100%. When the meter is correctly calibrated and the other conditions of measurements are met, exceeding these numbers is impossible. Find the cause of such high increase of radiation.

– **Perform only after replacing the UV lamps. Cancel ESC** is displayed during every calibration start up – the current measurement cycle can be disrupted. By pressing **OK** you confirm that you understand the conditions of this procedure. At this stage it is possible to resign from this procedure by pressing **ESC.**

During UV meter start up, it is essential to connect not only the power supply but also the UV sensor. Not connecting the sensor results in suspension of the meter's program. Network power voltage shall be connected via three core cable. Grounding cable shall be connected to the metal parts of the whole device enclosure and to the unused pin of the connector no. 8 – GND. Power switch can be unipolar or bipolar.

Connectors of the transmitter, if they are not used to control the shut-off valve, can be used for outer signalling of the proper work of the sterilizer, by placing control lamp in the place of the shut-off valve.

5 UV SENSOR

The sensor is equipped with 17 bit A/C converter, measuring amplifier with programmed amplification and precision stabilized power supply. It communicates with digital UV meter via serial interface. The meter cables can be extended (up to 100m) with no effect on the measurement result, on the condition that the capacity on the transmission line is kept lower than 400pF. The UV meter can be powered by a different stabilized power supply with voltage 4.5 – 6V. In such case, the sensor should be connected to the meter with the remaining 3 cables (SDA, SCL, GND).

6 TECHNICAL SPECIFICATIONS

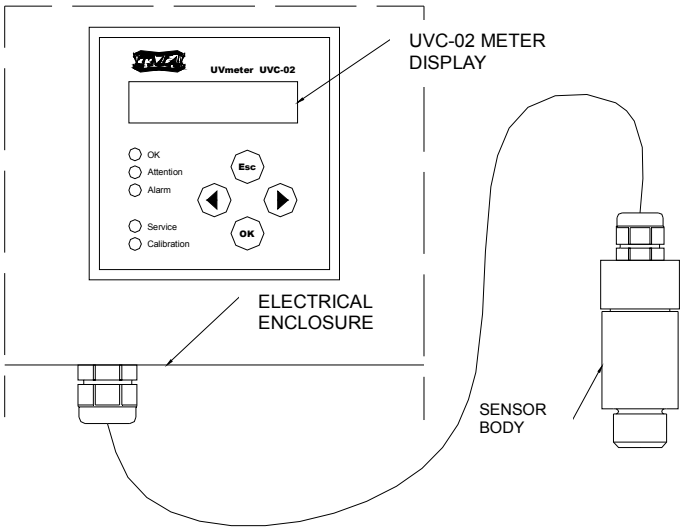

UVC-02 METER

- the enclosure fitted for panel installation;
- 4 key foil keyboard;
- LCD;
- operates in 3 languages (other languages on demand);
- signalling with 5 LEDs;
- digital communication between the meter and sensor(max. cable length is 100m);
- digital UV sensor with sensitivity peak at 254 nm;
- analog filtered output signal from the sensor (voltage or current) – optional;
- digital interface (RS232/USB) for communicating with the computer, enabling options change and remote data recording – optional;
- power consumption less than 1W;
- outer dimensions (WidthxHeightxDepth) 96x96x90mm;
- assembly opening 90x90.5mm.

The UV meter is designed for selective measurement of UV-C radiation – range 250-270 nm. UV sterilizers reach sensitivity peak at 254nm.

7 UV SENSOR ASSEMBLY

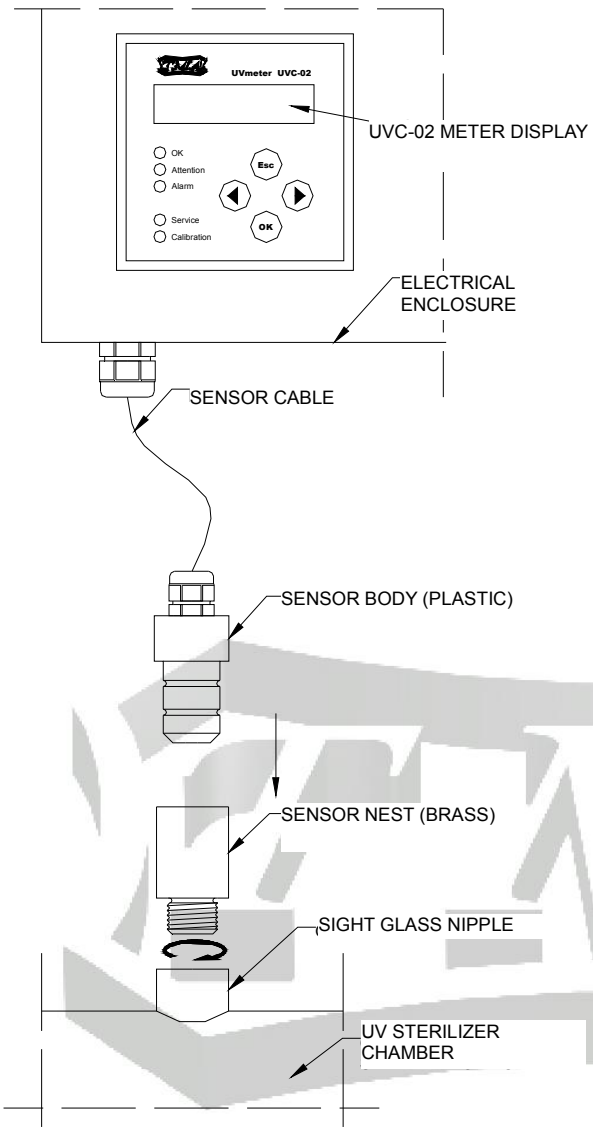

1. Connect the threaded part of the sensor's nest into the sight glass nipple (use your strength to obtain tight seal) and check the tightness between the chamber and the sensor's nest.
2. Insert the plastic sensor body into the brass nest.
3. Connect the sensor cable to the connector in the enclosure.
4. Turn the power on.
5. Initialize setup of the UV meter.

!!! WARNING !!!

The UV lamp or the UV meter shall not be taken out, moved or turned around !

8 DIAGRAM – PARTS LIST

UV METER UVC-02		DRAWING #
TITLE	PARTS LIST	**2**

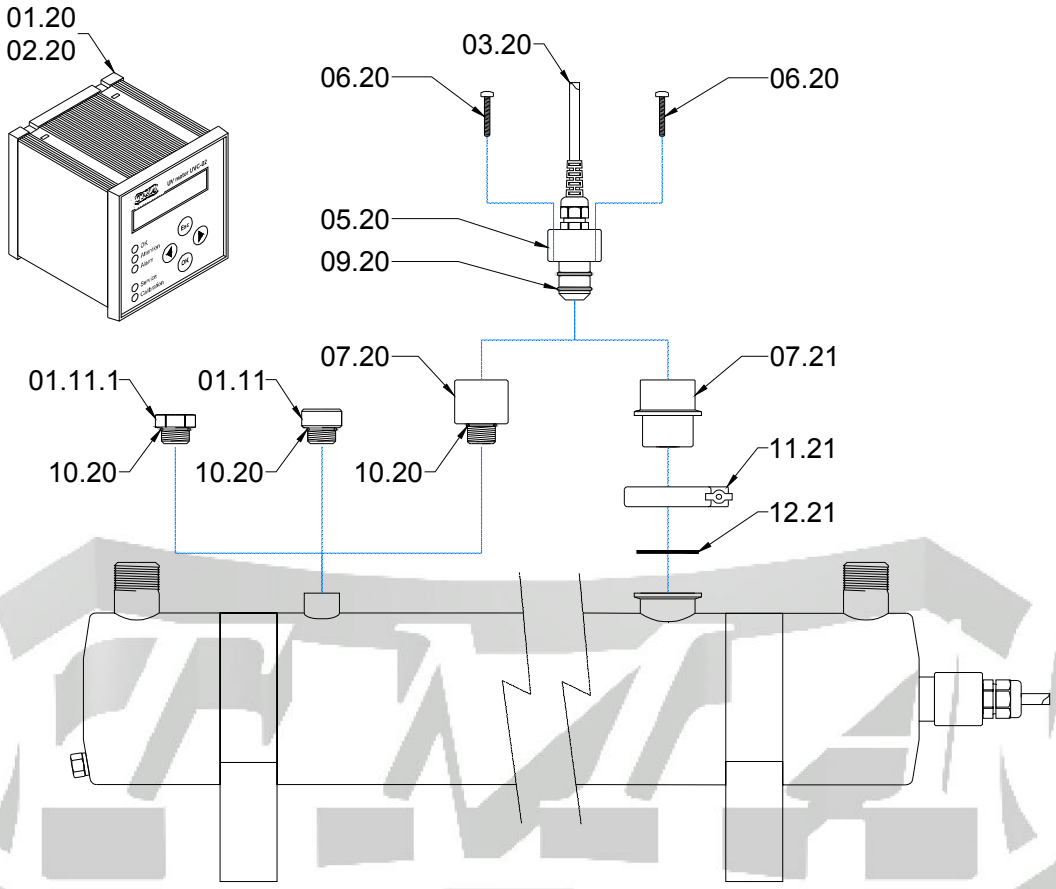

SYMBOL	PART	QUANTITY
01.20	GAUGE	1 pcs.
02.20	GAUGE WITH DIGITAL/ANALOG OUTPUT	1 pcs.
03.20	CABLE WITH SENSOR	1 pcs.
04.20	CABLE GLAND	1 pcs.
05.20	SENSOR BODY (PLASTIC)	1 pcs.
06.20	MOUNTING SCREWS	2 pcs.
07.20	SENSOR NEST (STAINLESS STEEL)	1 pcs.
01.11	SIGHT GLASS - RANSPARENT	1 pcs.
01.11.1	SIGHT GLASS – STAINLESS STEEL	1 pcs.
08.20	O-RING - SIGHT GLASS	1 pcs.
09.20	O-RING - SENSOR BODY	2 pcs.
10.20	O-RING - SIGHT GLASS	1 pcs.
07.21	SENSOR NEST TC	1 pcs.
11.21	CLAMP TC	1 pcs.
12.21	WASHER TC	1 pcs.