Made in Poland

# WATER STERILIZERS
# AMX SERIES

www.tma.pl


# *MANUAL*

Patent No. 204935

- April 2023 -

## TABLE OF CONTENTS

## User Safety

**WARNING**

This device may only be operated and installed by qualified personnel. Before installation, servicing or repairs verify the qualifications of personnel and limit these activities to such personnel. Any activities on this device can only proceed after thorough familiarization with this instruction. Noncompliance with the precautions listed hereon might expose personnel to serious bodily harm (damage to human skin from UV radiation), or damage to the device alone. The manufacturer, TMA, is not responsible for damage to the device caused by improper installation, maintenance and operation.

### READ THE MANUAL

Before proceeding with any activity with the sterilizers read the manual.

### RETAIN THE MANUAL

Retain the manual for reference during the whole time the device is in operation.
All precautions and warnings shall be obeyed by the user at all times during the operation of the device.

### POWER SUPPLY

Device is exclusively designed to be supplied from 220-230V 50Hz mains. It shall be installed and grounded in accordance with this manual and the local electrical code.
To guard against electrical shock, unplug the device every time work is to be done on it.

### GROUNDING

Operation of the device without connected grounding is inadmissible. Ungrounded operation might lead to occurrence of electrical shock and serious bodily harm with death included.

### ULTRAVIOLET RADIATION

Direct exposure to UV radiation is harmful to human skin and sight, which can cause from reddening of skin to serious burns, or ultimately loss of eyesight, depending on the time of exposure.
In such cases one shall contact physician as soon as possible.

*The used electrical and electronic equipment with the crossed-out rubbish bin symbol shall be collected separately. It is prohibited to put the used equipment with other waste. Inadequate use of the used equipment may have a negative impact on the environment and people's health. Separate collection of the equipment contributes to its re-use and recycling. The obligation of the used equipment selective collection rests on the user, who should provide it to the used equipment collector.*
*TMA devices are equipped with lamps that emit UV radiation, light sources that contain mercury. The owners of waste lamps containing mercury are obliged to collect them separately for further re-use and disposal.*

## 1. GENERAL INFORMATION

Thank you and congratulations on your purchase of TMA manufactured UV sterilization product. Sterilizers made by TMA are made from highest quality stainless steel. The thickness of the chamber wall guarantees high factor of safety in operation. All the raw materials and components are of best quality and were processed or manufactured in the EU countries. Plastics used in production of the lamp hoods withstand 110°C working temperatures. Devices completed successfully 30 Atm pressure trials.

AMX series sterilizers are equipped with electronic control system and alarm. Apart from that they are provided with:

- Audible UV Lamp Fault Alarm
- Optical UV Lamp Fault Alarm
- Total Work Time Counter
- Number of switches counter

In AMX models we introduced additional guides for the quartz sleeves easing the assembly and disassembly. This solution allows the same ease of assembly for device working horizontally or vertically. This guide prevents the quartz sleeve from breaking during the routine maintenance. The turbulent flow induced by the guide increases the efficaciency of disinfection. During the first 100 hours of operation the efficiency of disinfection is greater by 15% from the rated for the device.

New features allow continuing disinfection even without the flow of water through the chamber. Sterilizers do not require control of flow and temperature of water by the user. The sterilizer without flow could heat up to a maximal temperature of 85 ° C, after that it will turn off radiators. Return to work will take place at a temperature of approx. 65 ° C.

The design of the chamber contributes to lower incidence of sediment from calcium and magnesium on the surface of the quartz sleeve.

The AMX models are equipped with more durable amalgamate lamps– up to 16,000 hours of service. The plastic lamp hood has a secondary function as a sight glass. This innovative solution of the use of transparent to visible light lamp hoods allows optical indication of the state of the lamp.

We hold high hopes that the implementations of these innovative solutions fulfill your expectations for new and more efficient products from TMA.

**MANUFACTURER RESERVES THE RIGHT TO CHANGE THE CONSTRUCTION WITHOUT NOTICE**

The device delivered to you is disassembled and shall be protected from severe shocks and drops, as the quartz sleeve and lamps are brittle and fragile. The sterilizer shall be exclusively transported in horizontal position. The manufacturer is not responsible for damage arising from the conditions of transport.

Before installation and operation one shall read the instructions and implement the precautions listed.

Noncompliance with these precautions is grounds for releasing the manufacturer from warranty obligations.

## 2. APPLICATIONS

Disinfection with UV radiation is a reliable, simple and inexpensive method of sterilization. The use of this method is warranted every time microbiological risk exists.

Following applications might be listed, among many others:

- Potable water in private and municipal installations
- Potable and process water in restaurant and hotel business
- Process water in the production of medicines and cosmetics
- Water used in processing food
- Water in beverage production
- Water in swimming pools
- Control of green algae in ponds
- Rain water in horticultural farm
- And many others

The primary advantage of UV sterilization is water without microbes and damaging chlorine so often used in sterilization of water.

Sterilizer uses special low pressure UV lamp to produce UV radiation of wavelength of 254 nm which causes photochemical reaction damaging DNA of microorganisms leading to death or sterility.

The requirements for complete sterilization call for minimum dosage of 400J/m2 for potable water. Water flowing from the sterilizer is ready for immediate use.
UV Sterilization does not change the chemical makeup of water

***THERE IS NO POSSIBILITY OF OVERDOSING UV RADIATION DURING WATER STERILIZATION IN THE CHAMBER***

***THERE IS NO REQUIRED MINIMUM FLOW OF WATER/LIQUIDS THROUGH THE STERILIZER CHAMBER***

*Turning off radiators occurs at a temperature of approx. 85°C. Resuming at approx. 65°C*

**MINIMAL FLOW OF WATER IS NOT REQUIRED.**
**INCREASED FLOW THROUGH THE STERILIZER LOWERS THE DOSAGE DELIVERED TO MICROORGANISMS AND LOWERS EFFICIENCY OF DISINFECTION**

## 3. TECHNICAL SPECIFICATIONS

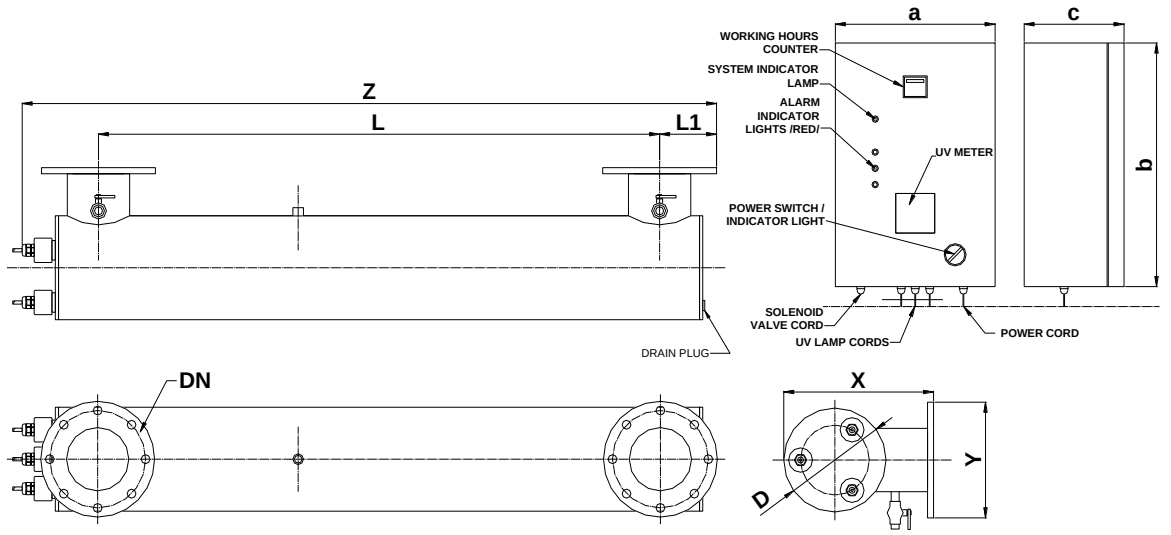


MODEL AMX 3

***TECHNICAL SPECIFICATIONS*:**

| **MODEL** | | | **AMX 0** | **AMX 1** | **AMX 2** | **AMX 3** | **AMX 4** | **AMX 5** |
|---|---|---|---|---|---|---|---|---|
| Nominal Flow At Transmittance T10=95%,Dose 400J/M2 | | | 28,0 m3/h | 40,0 m3/h | 73,0 m3/h | 131,0 m3/h | 211,0 m3/h | 277,0 m3/h |
| Power Supply | | | ~220V-240V 50-60Hz | | | | | |
| Nominal Power | | | 360 W | 360 W | 720 W | 1080 W | 1440 W | 1800 W |
| Dimensions | X / Y / Z | [mm] | 130 / 245/ 1690 | 320/ 220/ 1750 | 320 / 250/ 1750 | 375 / 285/ 1750 | 435/ 340/ 1760 | 435/ 340/ 1760 |
| | L / L1 | [mm] | 1464 / 71 | 1456 / 110 | 1430 / 125 | 1404 / 142,5 | 1340 / 170 | 1340 / 170 |
| | DN / D | [mm] | R 3" / 130 | DN100 / 220 | DN125 / 220 | DN150 / 256 | DN200 / 306 | DN200 / 306 |
| Weight with Enclosure | | | 17 kg | 45 kg | 54 kg | 90 kg | 110 kg | 120 kg |
| **STERILIZER CHAMBER:** | | | | | | | | |
| Chamber Material | | | Stainless Steel AISI 316 / 316L | | | | | |
| Finish | | | Satin | | | | | |
| Safety Class | | | IP 66 | | | | | |
| Operating Pressure | | | 10bar(1MPa) | | | | | |
| Operating Temperature (Recommended) | | | 0,5-50°C | | | | | |
| Quartz Sleeve Guide | | | Yes | | | | | |
| Sight glass Muff | | | 1pcs. | 1pcs. | 2 pcs. | 3 pcs. | 4 pcs. | 5 pcs. |
| Sample Valves | | | No | Yes | Yes | Yes | Yes | Yes |
| Drain Valve | | | Yes | Yes | Yes | Yes | Yes | Yes |
| Temperature sensor | | | No | No | Yes | Yes | Yes | Yes |
| Orientation | | | Horizontal | | | | | |
| **LOW PRESSURE UV LAMPS:** | | | | | | | | |
| No. of UV Lamps | | | 1 | 1 | 2 | 3 | 4 | 5 |
| UV Lamp Power | | | 325W | | | | | |
| Life of UV Lamps | | | 16 000 h | | | | | |
| UV Radiation Power at 254nm | | | 1x110 W | 1x110 W | 2x110 W | 3x110 W | 4x110 W | 5x110 W |
| **ELECTRICAL ENCLOSURE:** | | | | | | | | |
| Material | | | Plastic | | Plastic | | Steel | |
| Safety Class | | | IP 65 | IP 65 | IP42 | IP42 | IP42 | IP42 |
| Electronic Ballasts Safety Class | | | IP 66 | IP 66 | IP 66 | IP 66 | IP 66 | IP 66 |
| Dimensions /mm | | | 325x250x120 | 325x250x120 | 400x400x200 | 400x600x250 | 400x600x250 | 400x600x250 |
| Audible UV Lamp Fault Alarm | | | Yes | | | | | |
| Optical UV Lamp Fault Indicator | | | Yes | | | | | |
| Working Hours / Number Of Switches Counter | | | Yes / Yes | | | | | |
| Alarm System | | | Yes | | | | | |
| Solenoid Cut-Off Valve Terminals | | | Yes | | | | | |
| Terminals for Remote Alarm Indicator | | | Yes | | | | | |
| Remote ON/OFF Switch Terminals | | | Yes | | | | | |
| UV Intensity Measurement System | | | On demand /Optional/ | | | | | |

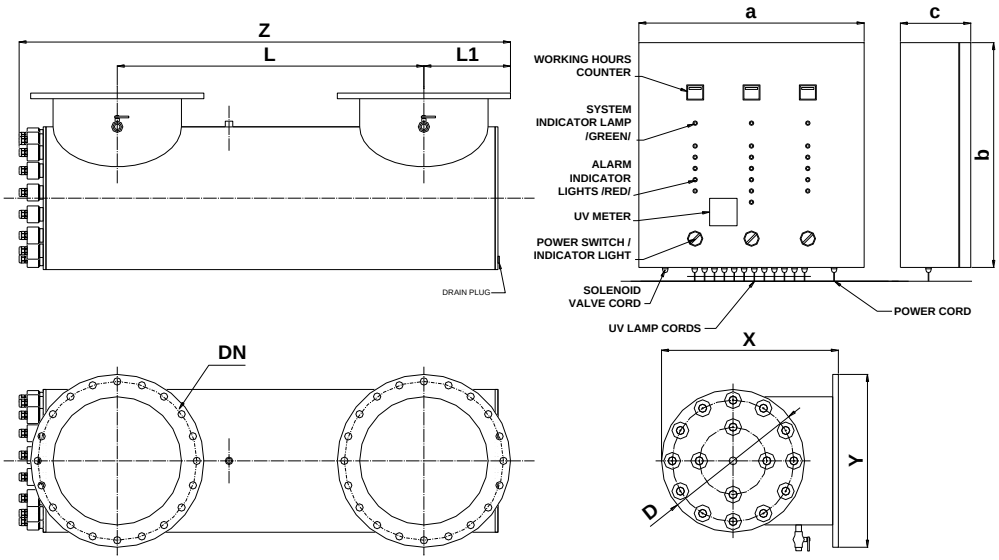


MODEL AMX 16

## *TECHNICAL SPECIFICATIONS*:

| MODEL | | | AMX 6 | AMX 8 | AMX 10 | AMX 12 | AMX 16 |
|---|---|---|---|---|---|---|---|
| Nominal Flow At Transmittance T10=95%, Dose 400J/M2 | | | 380,0 m3/h | 585,0 m3/h | 767,0 m3/h | 1010,0 m3/h | 1400,0 m3/h |
| Power Supply | | | ~220V-240V 50-60Hz | | | 3 x ~220V-240V 50-60Hz | |
| Nominal Power | | | 2160 W | 2880 W | 3600 W | 4320 W | 5760 W |
| Dimensions | X / Y / Z | [mm] | 420/ 395/ 1770 | 544 / 445/ 1770 | 544 / 505/ 1770 | 628/ 565/ 1780 | 628/ 615/ 1780 |
| | L / L1 | [mm] | 1295 / 197,5 | 1240 / 222,5 | 1190 / 252,5 | 1139 / 282,5 | 1089 / 307,5 |
| | DN / D | [mm] | DN250 / 306 | DN300 / 406 | DN350 / 406 | DN400 / 508 | DN450 / 508 |
| Weight with Enclosure | | | 140 kg | 180 kg | 200 kg | 250 kg | 270 kg |
| **STERILIZER CHAMBER:** | | | | | | | |
| Chamber Material | | | Stainless Steel AISI 316 / 316L | | | | |
| Finish | | | Satin | | | | |
| Safety Class | | | IP 66 | | | | |
| Operating Pressure | | | 10bar(1MPa) | | | | |
| Operating Temperature (Recommended) | | | 0,5-50°C | | | | |
| Quartz Sleeve Guide | | | Yes | | | | |
| Sight glass Muff | | | 6 pcs. | 8 pcs. | 10 pcs. | 12 pcs. | 16 pcs. |
| Sample Valves | | | Yes | Yes | Yes | Yes | Yes |
| Drain Valve | | | Yes | Yes | Yes | Yes | Yes |
| Temperature sensor | | | No | Yes | Yes | Yes | Yes |
| Orientation | | | Horizontal | | | | |
| **LOW PRESSURE UV LAMPS:** | | | | | | | |
| No. of UV Lamps | | | 1 | 2 | 3 | 4 | 5 |
| UV Lamp Power | | | 325W | | | | |
| Life of UV Lamps | | | 16 000 h | | | | |
| UV Radiation Power at 254nm | | | 6x110 W | 8x110 W | 10x110 W | 12x110 W | 16x110 W |
| **ELECTRICAL ENCLOSURE:** | | | | | | | |
| Material | | | Steel | | | | |
| Safety Class | | | IP 42 | IP42 | IP42 | IP42 | IP42 |
| Electronic Ballasts Safety Class | | | IP 66 | IP 66 | IP 66 | IP 66 | IP 66 |
| Dimensions /mm | | | 400x600x250 | 600x800x250 | 600x800x250 | 800x800x300 | 800x800x300 |
| Audible UV Lamp Fault Alarm | | | Yes | | | | |
| Optical UV Lamp Fault Indicator | | | Yes | | | | |
| Working Hours / Number Of Switches Counter | | | Yes / Yes | | | | |
| Alarm System | | | Yes | | | | |
| Solenoid Cut-Off Valve Terminals | | | Yes | | | | |
| Terminals for Remote Alarm Indicator | | | Yes | | | | |
| Remote ON/OFF Switch Terminals | | | Yes | | | | |
| UV Intensity Measurement System | | | On demand /Optional/ | | | | |

Standard features:

- Sterilizer chamber made from stainless steel (AISI 316),
- Electrical enclosure, with control system,
- Set of quartz sleeves
- Set of UV lamps
- Set of O-rings + backup set of O-rings
- Terminals for connecting electromagnetic valve shutting off flow in case of power or lamp failure

Optional Accessories:

- UV intensity sensor
- Sterilizer supports

## 4. TECHNICAL DESCRIPTION

Sterilizer's chamber is totally made from stainless steel. Quartz sleeves with UV lamps are mounted in the chamber.

When mounted vertically, the inlet should be located in the bottom part of the chamber and the outlet in the upper part. When mounted horizontally, the arrangement is optional. At the bottom of the chamber /model AMX1-AMX16/ the drain plug is located, which is used to empty the chamber from fluid. The power supply system is mounted in the electrical enclosure and connected with the sterilizer by hi-potential wires. The enclosure houses, besides the power supply, is equipped lamp working hours counter, the audible and optical alarm, and indicating lights with the terminals for electromagnetic shutoff valve in case of lamp or power failure.

Power supply is 220-230V ± 10%, 50-60 Hz (or 3 x 220-230V 50/60Hz).

The device has anti-shock protection by earth terminal.

Sight glass muff enables indication of working condition of the UV lamps.

### 4.1. LEADING OUT THE ALARM SIGNAL IN AMX0,AMX1 MODEL

Connect alarm signal wires to the terminals 1 & 2 on electronic plate /neutral – without voltage/.

The contacts 1 and 2 operate with a preset delay of about 2-3 minutes - this is the time to reach the full efficiency of the device. <u>During this period, terminals 1 and 2 are open</u>.

After 2-3 minutes, the device operates as follows:

| | |
|---|---|
| • CONTACTS 1-2 CLOSED | - sterilizer working properly |
| • CONTACTS 1-2 OPEN | - UV lamp damage<br>- Alarm on<br>- Power cut off |

### 4.2. CONNECTION OF SOLENOID VALVE IN AMX0,AMX1 MODEL

There is possible to connect solenoid valve [max. 2A] to the terminals 1 & 2 /neutral/ on the electronic plate in electrical enclosure.
The contacts 1 and 2 operate with a preset delay of about 2-3 minutes - this is the time to reach the full efficiency of the device. During this period, terminals 1 and 2 are open.
After 2-3 minutes, the device operates as follows:

| | |
|---|---|
| • CONTACTS 1-2 CLOSED | - sterilizer working properly |
| • CONTACTS 1-2 OPEN | - UV lamp damage<br>- Alarm on<br>- Power cut off |

### 4.3. REMOTE-CONTROLLED ON/OFF SWITCH IN AMX0,AMX1 MODEL

After removing the bridge, it is possible to connect remote-controlled switch to the ON/OFF terminals /**caution: voltage 230V!**/.

| | |
|---|---|
| • CONTACTS 1-2 CLOSED | - sterilizer on |
| • CONTACTS 1-2 OPEN | - sterilizer off |

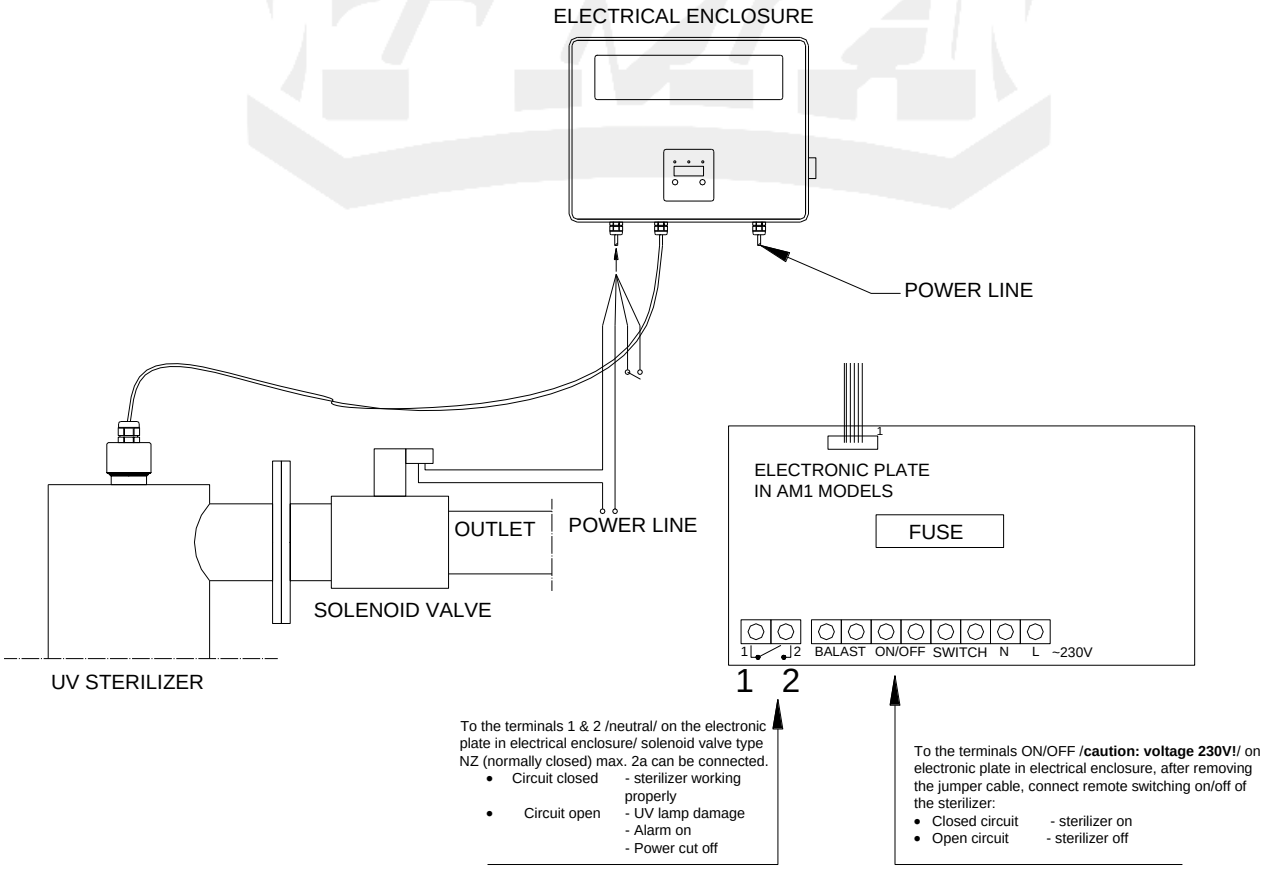


AMX0,AMX1 – Diagram for solenoid valve, alarm signal and outside connection of the device.

### 4.4. LEADING OUT THE ALARM SIGNAL IN AMX2-AMX16 MODELS

Connect the alarm signal wires to the terminals 1 & 2 /neutral/ on the terminal blocks in electrical enclosure /in the right bottom corner/.
The contacts 1 and 2 operate with a preset delay of about 2-3 minutes - this is the time to reach the full efficiency of the device. During this period, terminals 1 and 2 are open.
After 2-3 minutes, the device operates as follows:

| | |
|---|---|
| • CONTACTS 1-2 CLOSED | - sterilizer working properly |
| • CONTACTS 1-2 OPEN | - UV lamp damage<br>- Alarm on<br>- Power cut off |

### 4.5. CONNECTION OF SOLENOID VALVE IN AMX2-AMX16 MODELS

There is possible to connect solenoid valve [max. 2A] to the terminals 1 & 2 /neutral/ on the electronic plate in electrical enclosure.
The contacts 1 and 2 operate with a preset delay of about 2-3 minutes - this is the time to reach the full efficiency of the device. During this period, terminals 1 and 2 are open.
After 2-3 minutes, the device operates as follows:

| | |
|---|---|
| • CONTACTS 1-2 CLOSED | - sterilizer working properly |
| • CONTACTS 1-2 OPEN | - UV lamp damage<br>- Alarm on<br>- Power cut off |

### 4.6. REMOTE-CONTROLLED ON/OFF SWITCH IN AMX2-AMX16 MODELS

After removing the bridge, it is possible to connect remote-controlled switch to the terminals 3 & 4 /**caution: voltage 230V!, I=0,2A**/.

| | |
|---|---|
| • CONTACTS 1-2 CLOSED | - sterilizer on |
| • CONTACTS 1-2 OPEN | - sterilizer off |

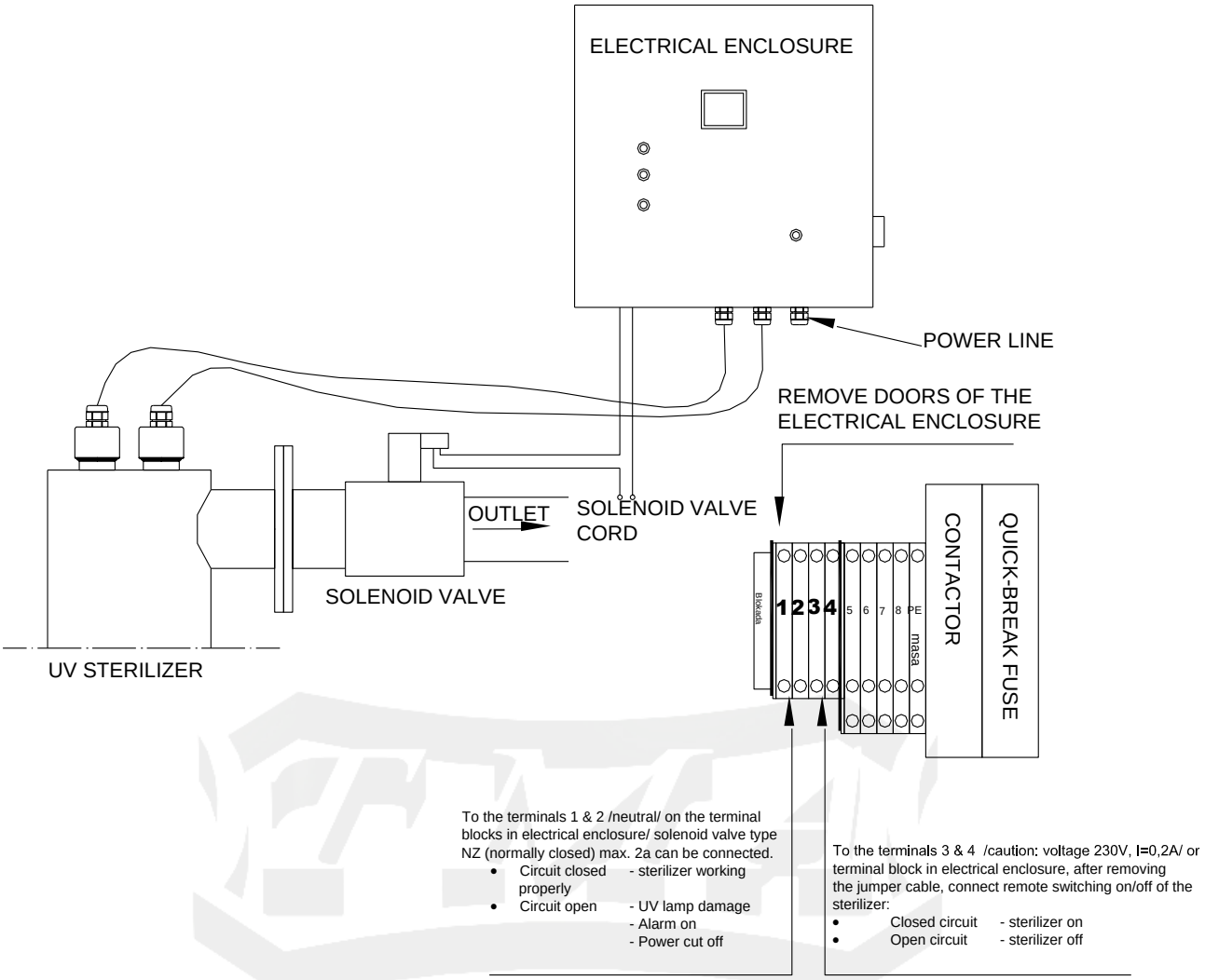


AMX2 - Diagram for solenoid valve, alarm signal and outside connection of the device.

## 5. INSTRUCTION FOR INSTALLATION AND OPERATION

### 5.1. CHAMBER ASSEMBLY

a) Device assembles in horizontal position. Temperature range for installation is from 0.1 to 35°C. DO NOT ALLOW THE CHAMBER TO FREEZE.
b) Correct assembly shall prevent the creation of air gap in the chamber.
c) By-pass installation is recommended.
**d) Assembly cannot cause strain on the nipples.**
**e) It is forbidden to mount the sterilizer on flanges without appropriate support.**
f) Upstream of the intake install potable water filter, minimum rating 0.1 mm, recommended 0.05 mm. Water shall not contain more than 0.3mg Fe and 0.1 Mn.
g) Install cut-off valves on both sides.

| | |
|---|---|
| 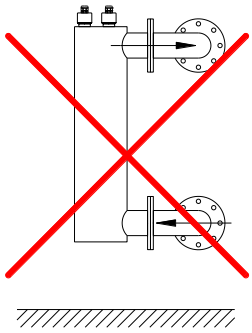 | Vertical Forbidden |
| 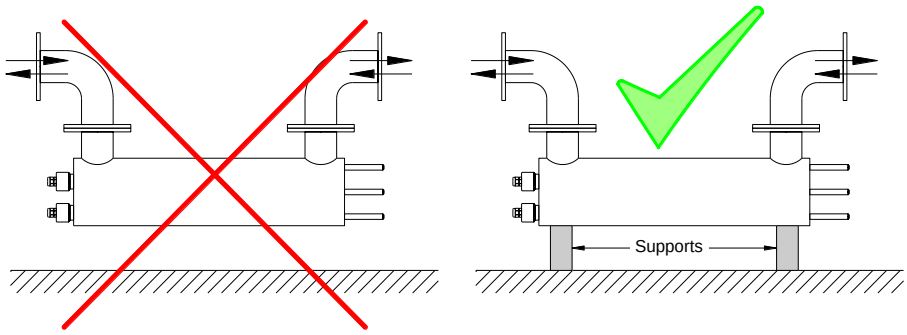 | Horizontal |
| 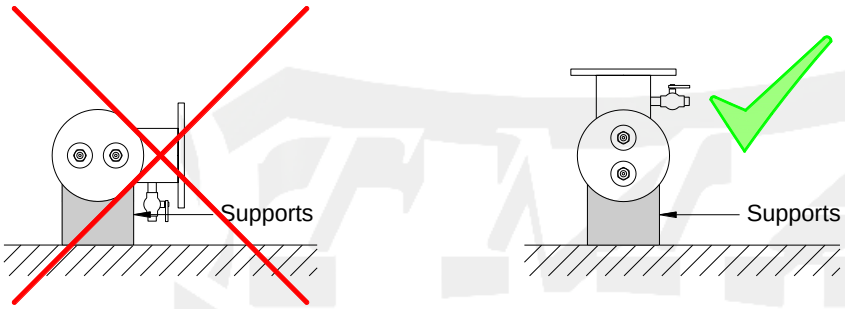 | Horizontal |
| 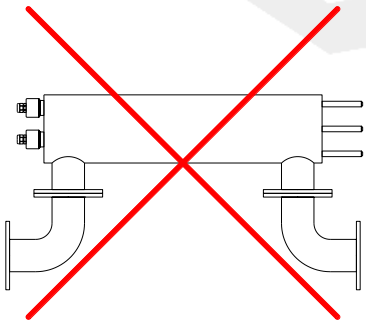 | Horizontal Forbidden |

## 5.2. QUARTZ SLEEVES ASSEMBLY

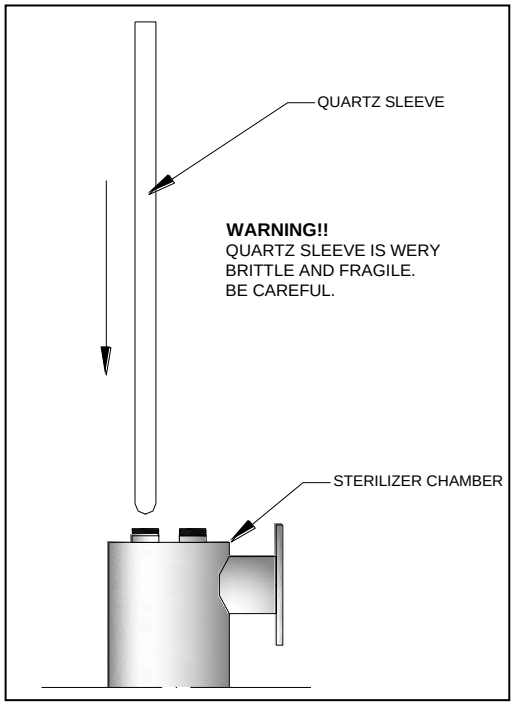


(GRAFICAL MOUNTING INSTRUCTION ON PAGE 27-28)

a) Slide in gently through the nipple the quartz sleeves; continue through sleeve guides onto nests at the bottom.

b) Place the O-ring over quartz sleeve and against the lip of the nipple. Next place the washer over the O-ring, screw the muff onto this assembly with the provided tool. Turn the muff to considerable resistance in order to tighten the seal. Tightening the muff shall not break the sleeve.

c) Fill the chamber under full pressure and check the seal tightness.

**!!! ATTENTION !!!**
**Tightening the muffs with other tools may cause quartz sleeves breakage.**

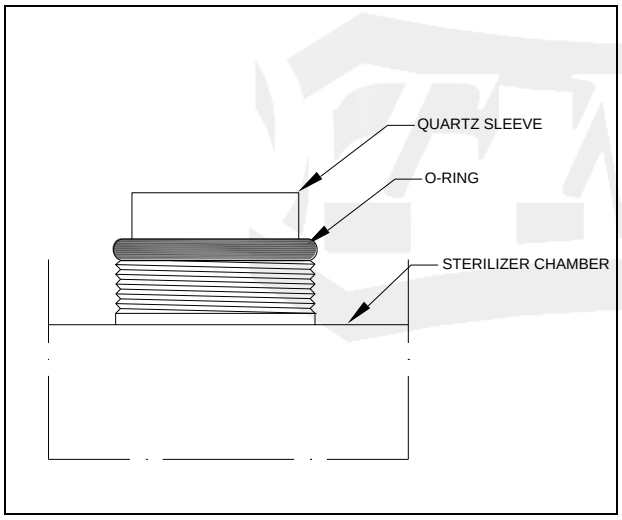


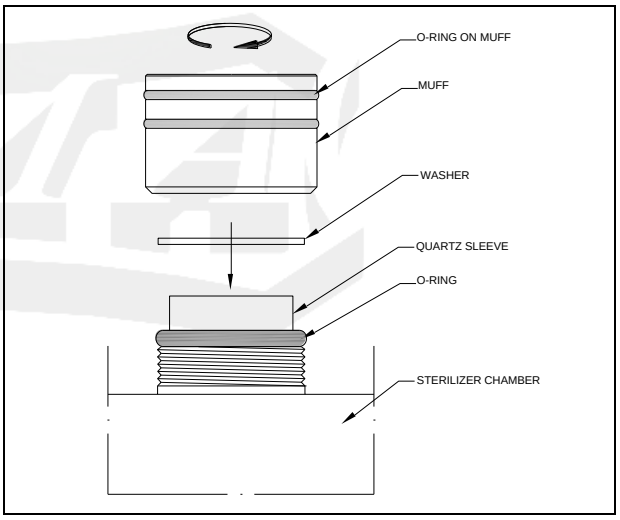


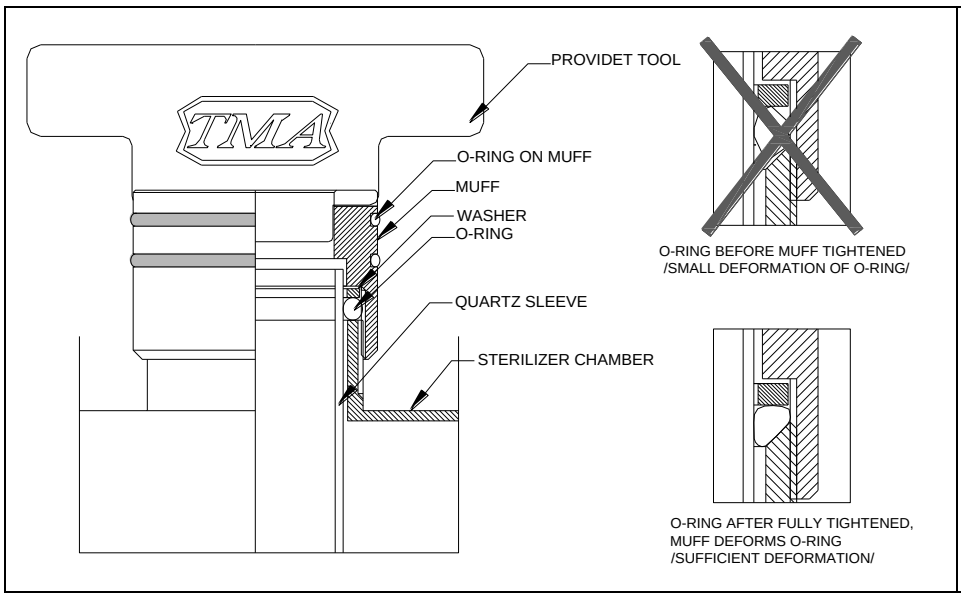


Tightest seal around quartz sleeve shall be created with the largest possible deformation of O-ring. O-ring is visible through the sleeve. Tighten muff with the provided tool, as seen.

## 5.3. UV LAMPS AND ELECTRICAL ENCLOSURE ASSEMBLY

(GRAPHICAL INSTRUCTIONS AT PAGE 27, 28)

a) Mount electrical enclosure on wall, at least 60 cm from the floor.
b) Place the socket on the end of UV lamp with four pins. Gently slide the fully connected lamp into the quartz sleeve.

**!!! CAUTION !!!**
**MOUNT UV LAMPS IN PROTECTIVE, PREFERABLY COTTON GLOVES.**
If not done as required, the UV lamps may break after turning on the device.

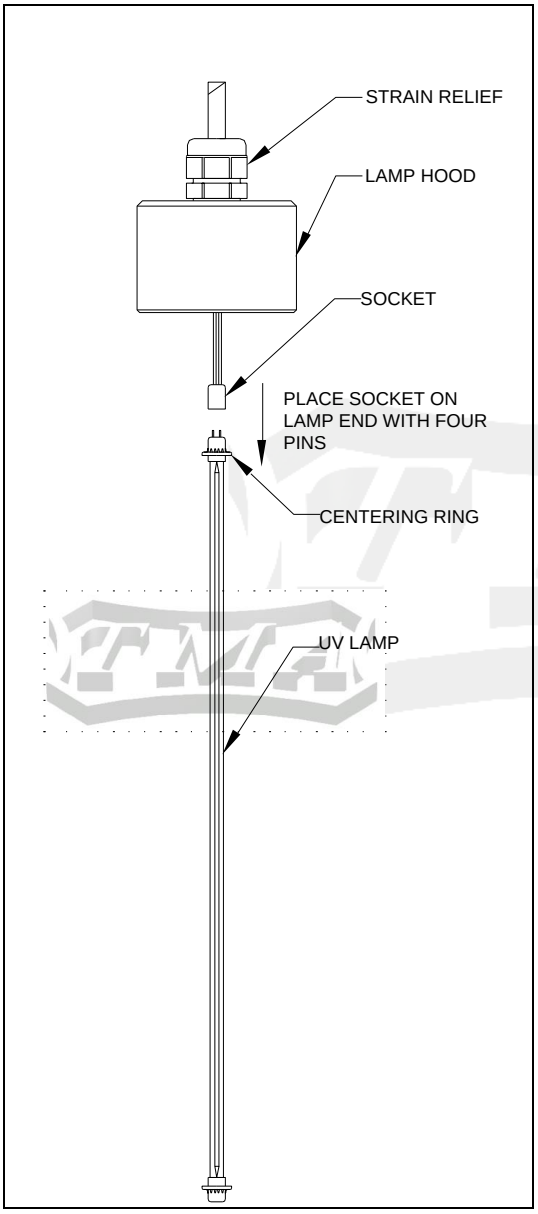


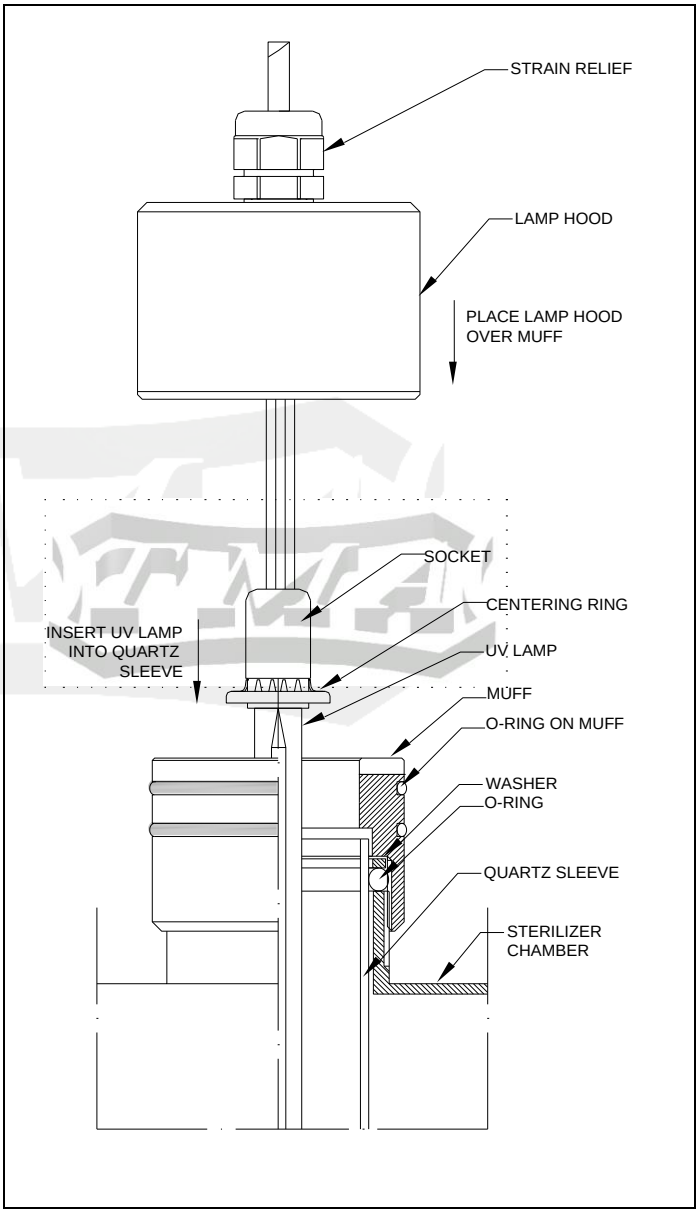


c) Place lamp hood over muff.
d) Plug in to mains 230V, 50 Hz, in the electrical enclosure, according to the labels.
e) Turn device on by using switch on the side or front of electrical enclosure. Green indicator light goes on when device is connected to power and powered up.
f) Replace UV lamps after its end of life time.

## ATTENTION!

1. Any fault of UV lamp, including burn out, is signalized by lighting up of red indicator lamp and tripping of audible alarm.
2. Incidental powering of the electrical enclosure without connected UV lamps may cause damage to electronic ballast driving UV lamps.

## ATTENTION!

In case of installing solenoid shut-off valve ( terminals 1 & 2) upstream /or downstream/ of the sterilizer, tripping alarm or power interruption causes immediate shutting off of fluid flow to the chamber of the sterilizer **/ Section 4.3-4.6/.** Terminals 1 & 2 are neutral. Power to solenoid shut-off valve shall be connected through terminals 1 & 2.

Solenoid shut-off valve serves the purpose of preventing unsterilized fluid entering the installation downstream of the sterilizer in the case of power interruption or lamp failure.

### 5.4. MOUNTING TEMPERATURE SENSOR (MODELS AMX2-AMX16)

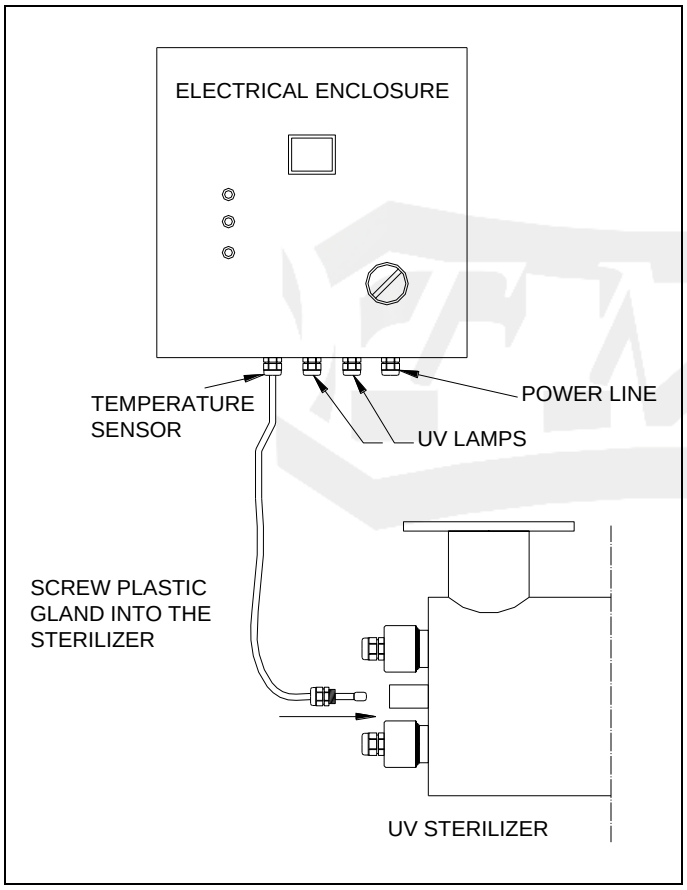


a) Choose the temperature sensor cord (ended with strain relief PG11).
b) Loosen the cable gland
c) Install the strain relief into the hole at the center of sterilizer (between the UV lamps mountings)
d) Move the wire to the end of the hole.
e) Tighten the strain relief.

## ATTENTION!

Improper mounting of temperature sensor can cause a short circuit, resulting in failure of whole device

*Turning off radiators occurs at a temperature of approx. 85°C. Resuming at approx. 65°C*

## 6. DESCRIPTION OF ALARMS IN ELECTRICAL CABINET / AMX0,AMX1 /

| Display indications | Cause | Solving the problem |
|---|---|---|
|  <br>- Blinking digit 7 on the display.<br>- An intermittent sound signal | - 7 days left to the end of life time of UV lamp<br>- change UV lamp after 7 days. | 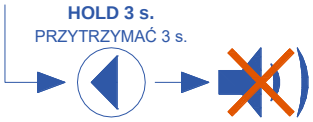 <br>Hold left button more than 3 seconds to silence the sound alarm |
|  <br>- Blinking number 0 on the display.<br>- An intermittent sound signal | - UV lamp reached its end of life time. | 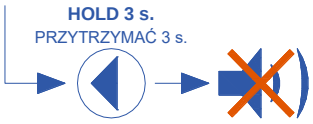 <br>Hold left button more than 3 seconds to silence the sound alarm (max 2 times) |
|  <br>- Blinking number 0 on the display.<br>- Blinking 3 LED's over display<br>- Continuous sound signal | - UV lamp is damaged or reached its end of life time. | Change UV lamp |
|  <br>- The display shows weird characters.<br>- Two or three LEDs appear on the display at the same time | - Possible damage to the display or the microprocessor. | Please Contact your dealer |
|  <br>- No indication on the display<br>- No indication on LED above display<br>- No audible alarm | - No power at the input of the control cabinet. | - Check power supply.<br>- Check the fuse in the alarm system |

## 7. RESSETING COUNTER IN ALARM SYSTEM / ONLY MODEL AMX0,AMX1/

COUNTER IN THE ALARM SYSTEM SHOULD BE RESSETED EACH TIME THE UV LAMP IS REPLACED

a) Disconnect from power supply /neutral and life/.
b) Replace UV Lamp – see p. **9. INSTRUCTION FOR REPLACEMENT OF UV LAMP**
c) Connect device to Power supply (power switch should be turned off)
d) Hold the right button under display.

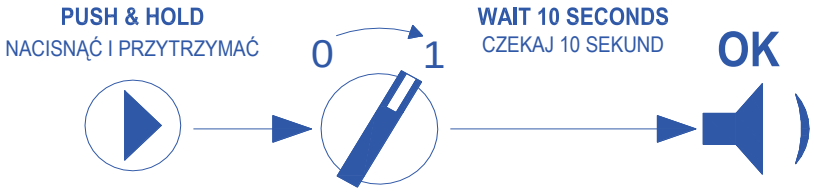


e) Turn on the power switch while still holding the right button for more than 10 seconds.
f) Short sound signal will confirm resetting the work time counter.

## 8. LEGEND FOR INDICATOR LIGHT ON ENCLOSURE

Lighted color indicator lights inform the operator of the status of the sterilizer. Certain conditions can be identified from the configuration of lights. For these corrective actions are listed below:

| ***Alarm*** *Red Light* | ***Power Supply*** *Green Light* | ***Power*** *Green Light* | ***Problem*** | ***Action*** |
|---|---|---|---|---|
| OFF | ON | ON | No fault | - |
| OFF | BLINKING | ON | No fault – heating the UV lamps | - |
| OFF | OFF | OFF | No Power | Check power source |
| ON | OFF | ON | 1.Burned out or faulty UV lamp<br>2.Faulty starter | 1.Replace UV lamp<br>2.Replace starter |
| OFF | OFF | ON | Alarm System Fault | Contact Dealer. Replace alarm system. |

## 9. MAINTENANCE

a) **UV radiation is harmful to eyes and skin. It is forbidden to directly observe UV lamp (radiator) during operation.**
b) It is recommended to check cleanness of the quartz sleeve whenever the UV lamp is replaced.
c) If any sediment is noticed on the surface of the quartz sleeve, it is recommended to immediately clean the sleeve. Negligence of this recommendation can cause drop in efficiency of sterilization.
d) Any time the sleeve is cleaned or replaced it is required to **unconditionally replace the O-ring creating the seal around the sleeve.**
e) Inlet and outlet valves shall be opened slowly to prevent the rush of fluid hitting and damaging the quartz sleeve.
f) There is no need for minimal flow through the device as it is designed in such a way that there may be no flow through the chamber with no damage to the sterilizer. When there is no flow of water through the chamber can heat up to approx. 85°C that is when turning off radiators occurs. Sterilizer is resumed to work after reaching temperature of approx. 65°C.
g) UV sterilizer should work constantly - his long-term exclusion may cause secondary infection in the installation, which is very difficult to remove.
h) It is recommended that before the UV sterilizer a filter is installed.
i) Water not fit for consumption may require treatment i.e. deironing, softening or filtering. If any doubt, please contact your dealer.
j) In case of high turbidity and waste water, the choice of equipment and efficiency should be made by the dealer.
k) Sterilizers must be sized for the maximum momentary flow of water (matching them to the daily flows may result in incomplete disinfection)
l) Avoid frequent turning on and off the equipment. One on-off cycle lowers the UV lamp life by about 10-20 hours.
m) Sterilizers should not be installed in such a way that their work was dependent on other devices, e.g. pumps, pressure-water.
n) Flow rate through the device can be increased; however, this lowers the delivered dosage and lowers the efficiency of disinfection.
o) The lamp needs about 2 minutes to reach full capacity at temperature of water about 12-16 °C. If the water is at temperature 5-12°C, the time might be about 3-5 minutes.
p) If the sterilizer is left idle for longer period of time or it can freeze, we recommend that the water be drained from the chamber. The chamber is provided with drain valve.
q) **Bioassay samples shall be collected into sterile opaque containers as not to expose the sample to the light to avoid photo reactivation of microorganisms, which can rebuild their damaged DNA in presence of light**.
r) In case the red indicator light is on, replacement of the UV lamp is necessary. The part number can be found on transparent plastic lamp hood placed over the muff.
s) Even short lived surge, to above 254V, can damage the electronic ballast driving the UV lamps.

t) Using faulty or post end of life UV lamps / operating time above their durability period / can lead to damage to electronic ballast located in the electrical enclosure. When replacing the UV lamp, protective gloves should be worn.
u) Excessive humidity and water inside the quartz sleeve can cause damage to the power supply of the UV lamp.
v) The leakage current going into grounding is 1,5 mA for each UV lamp.
w) Fans in control cabinets should be replaced every 50 000h.
x) In control cabinets there are mounted protection devices as below:

| Sterilizer type | Protection device |
|---|---|
| **AMX0** | Fuse 2A |
| **AMX1** | Fuse 2A |
| **AMX2** | Circuit breaker C6 |
| **AMX3** | Circuit breaker C6 |
| **AMX4** | Circuit breaker C10 |
| **AMX5** | Circuit breaker C10 |
| **AMX6** | Circuit breaker C13 |
| **AMX8** | Circuit breaker C16 |
| **AMX10** | Circuit breaker C20 |
| **AMX12** | Circuit breaker C16 |
| **AMX16** | Circuit breaker C16 |

## 10. INSTRUCTION FOR REPLACEMENT OF UV LAMP

(GRAPHICAL INSTRUCTIONS AT PAGE 28)

In order to replace the UV lamp one shall:
a) Disconnect from power supply /neutral and life/,
Replacing the radiator does not require shutting off the water flow through the chamber.
b) Put on protective gloves, preferably made of cotton,
c) Take off plastic hood,
d) Slide out the UV lamp from the quartz sleeve,

**DO NOT UNSREW THE STEEL MUFF!**

e) Remove sockets from connectors of the UV Lamp,
f) Remove old UV lamp from the quartz sleeve,
g) Carefully place the new UV lamp in the sleeve,
h) Reverse the remaining steps.

**ATTENTION**!
In model AMX sterilizers UV lamps must have special centering ring at both ends.
When the UV lamps are shipped from the manufacturer, the centering rings are provided with every lamp.

## 11. REPLACEMENT AND CLEARING OF THE QUARTZ SLEEVE (WARNING: VERY BRITTLE)

(GRAPHICAL INSTRUCTIONS AT PAGE 28)

In order to replace quartz sleeve one shall:

a) Disconnect the power supply,
b) Cut off the liquid flow through the chamber,
c) Allow for lamp to cool down from operating temperature,
d) Remove UV lamp according to p. 10. /Instruction for replacement of UV lamp/,
e) Unscrew the steel muff using special spanner,
f) Take off the washer and O-ring from the quartz sleeve,
g) Slide the sleeve out of guides and nipple of the sterilizer,
h) Every time the UV lamp is replaced, when it is necessary to clean the quartz sleeve use common glass cleaners and then inside of the sleeve should be thoroughly dried so that no liquid is left there,

**ATTENTION!**

**SLEEVE IS MADE OF PURE QUARTZ – VERY BRITTLE**

**ATTENTION!**

**AT THE TIME OF REPLACEMENT OR CLEARING OF THE QUARTZ SLEEVE, THE O-RING MUST BE REPLACED**

i) Slide carefully the new or cleaned quartz sleeve into the chamber of the sterilizer,
j) Place **new O-ring** over the sleeve, then place the washer,
k) Tighten the muff over the O-ring and washer with the provided tool. Check the proper placement of the O-ring, it should be lodged into the **conical groove in the nipple of the sterilizer**,
l) Open gradually the cut-off valves, flood the chamber, and check the seal around the sleeve. If it springs a leak, tighten the muff till tight seal is obtained,
m) Place the UV lamp according with p. 10 of this Manual.

## 12. TROUBLESHOOTING

| *Lp.* | *Problem* | *Cause* | *Action* |
|---|---|---|---|
| **1** | Burned out UV Lamp<br>Water inside the quartz sleeve - . short circuit – open circuit on circuit breaker | Muff not tightened sufficiently.<br>Worn out O-ring. | Take quartz sleeve out, dry interior, change O-ring, and assemble back. Tighten muff. If device does not work – electronic ballast damaged – replace – contact dealer |
| **2** | Burned out UV lamp | End of lamp life caused by number of working hours and number of on-off cycles. | Replace UV lamp. |
| **3** | Operation of the device causes the circuit breakers or differential switches to be disconnected | - There was a short circuit in the electrical system - the water got into the quartz sleeve/UV radiator - badly tightened muff | Disconnect the unit from the power supply; check the condition of the UV radiators and the quartz tubes.<br>In case of getting water into the quartz tubes proceed as in item 1. |

### 12.1. PROCEDURES IN THE EVENT OF FAILURE IN MULTI-RADIATOR DEVICES

Description:

The alarm indication LED /RED/ on one of the UV radiators lights up in the control cabinet and there is constant audible alarm.

Cause:

- There is a malfunction or burnout of the UV radiator.
- The alarm system or ballasts are damaged.

Procedure:

a. Disconnect the device from the power supply
b. If the device is warmed up wait for it to cool down.
c. Disconnect all UV radiator that work properly (remove the plastic socket from the UV radiator).
d. Put the lamp hoods on all muffs.

**LAMP HOODS MUST BE IMPOSED ON ALL MUFFES TO PROTECT THE USER FROM UV RADIATION**

e. Reboot the unit and check the UV radiator and alarm system (in this case, the alarm system should indicate failure of all sections that are not connected to the UV radiators). Wait 2-3 minutes for UV radiator to warm up.

| | | | | |
|---|---|---|---|---|
| UV lamp is **NOT** working | ⇨ | Alarm system signals failure – red LED | ⇨ | Burned out UV lamp |
| | | Alarm system signals proper work – green LED | ⇨ | Burned out UV lamp and/or damaged alarm system |
| UV lamp is working | ⇨ | Alarm system signals failure – red LED | ⇨ | Damaged alarm system |
| | | Alarm system signals proper work – green LED | ⇨ | Everything works properly |

f. Repeat steps a - b.
g. Disconnect the previously checked UV radiator and plug in another radiator that is known to be working properly.
h. Put the lamp hoods on all muffs. Reboot the unit and check the UV radiator. Wait 2-3 minutes for UV radiator to warm up.

| | | | | |
|---|---|---|---|---|
| UV lamp is **NOT** working | ⇨ | Alarm system signals failure – red LED | ⇨ | Damaged electrical ballasts |
| | | Alarm system signals proper work – green LED | ⇨ | Damaged electrical ballasts and/or damaged alarm system |
| UV lamp is working | ⇨ | Alarm system signals failure – red LED | ⇨ | Damaged alarm system |
| | | Alarm system signals proper work – green LED | ⇨ | Everything works properly |

## 13. TRANSPORT

The UV sterilizer should be shipped only in horizontal position. It should be disassembled for shipping. The quartz sleeve and lamp should be packed separately as they are brittle. They should be sufficiently well packed to withstand rough handling.

## 14. DIAGRAM – DIMENSIONS

| | UV WATER STERILIZER AMX SERIES | DWG# |
|---|---|---|
| | TITLE: AMX SERIES – GENERAL DIAGRAM - DIMENSIONS | 1 |

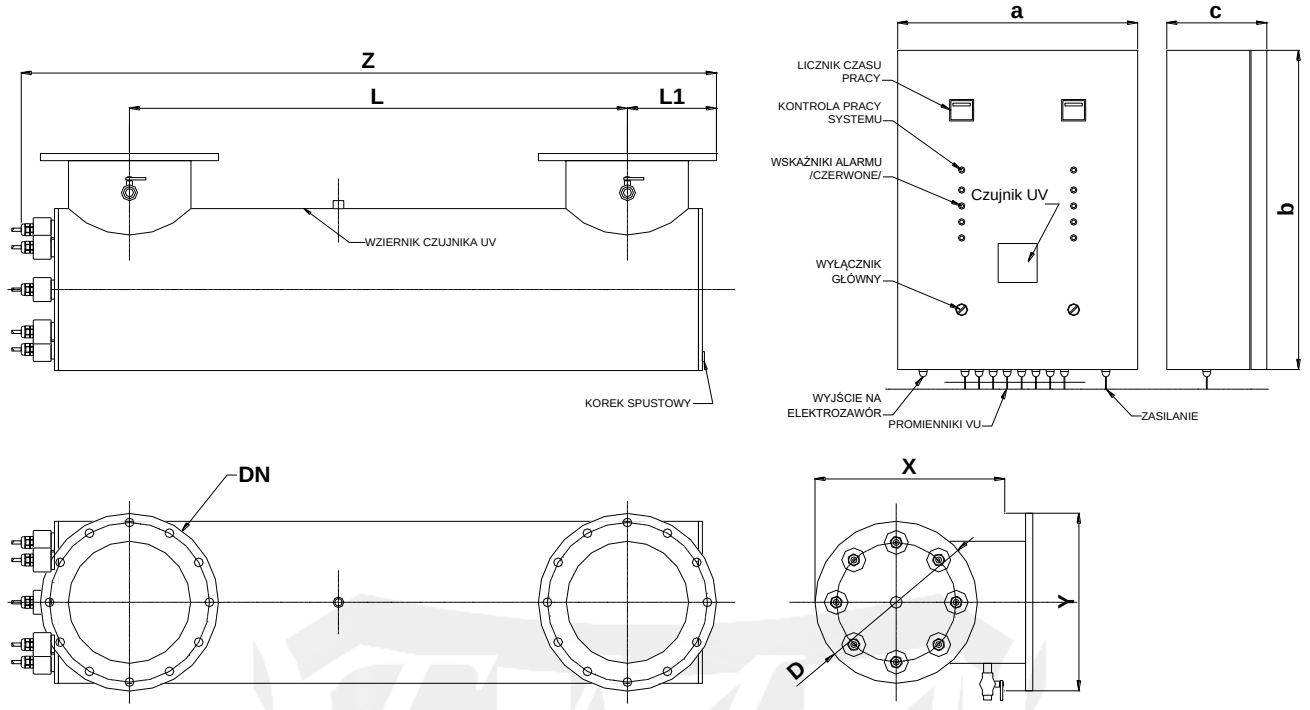


### DIMENSIONS

| MODEL | X [mm] | Y[1] [mm] | Z [mm] | L [mm] | L1 [mm] | DN | D [mm] | a [mm] | b [mm] | c [mm] |
|---|---|---|---|---|---|---|---|---|---|---|
| **AMX0** | 245 | 130 | 1690 | 1464 | 71 | R 3'' (DN80) | 130 | 325 | 250 | 120 |
| **AMX1** | 320 | 220 | 1750 | 1456 | 110 | DN100 | 220 | 325 | 250 | 120 |
| **AMX2** | 320 | 250 | 1750 | 1430 | 125 | DN125 | 220 | 400 | 400 | 200 |
| **AMX3** | 375 | 285 | 1750 | 1404 | 142,5 | DN150 | 256 | 400 | 600 | 250 |
| **AMX4** | 420 | 340 | 1760 | 1340 | 170 | DN200 | 306 | 400 | 600 | 250 |
| **AMX5** | 420 | 340 | 1760 | 1340 | 170 | DN200 | 306 | 400 | 600 | 250 |
| **AMX6** | 420 | 395 | 1770 | 1295 | 197,5 | DN250 | 306 | 400 | 600 | 250 |
| **AMX8** | 544 | 445 | 1770 | 1240 | 222,5 | DN300 | 406 | 600 | 800 | 250 |
| **AMX10** | 544 | 505 | 1770 | 1190 | 252,5 | DN350 | 406 | 600 | 800 | 250 |
| **AMX12** | 628 | 565 | 1780 | 1139 | 282,5 | DN400 | 508 | 800 | 800 | 300 |
| **AMX16** | 628 | 615 | 1780 | 1089 | 307,5 | DN450 | 508 | 800 | 800 | 300 |

[1] ALL DIMENSIONS REFER TO THE STANDARD VERSION TO OPERATE AT A PRESSURE OF 10 BAR [PN10]. IN ANOTHER VERSION, THE SIZE MAY VARY SLIGHTLY..

## 15. DIAGRAM – SPARE PARTS LIST

| | | |
|---|---|---|
| | UV WATER STERILIZER AMX SERIES | DWG# |
| TITLE | AMX SERIES – SPARE PARTS LIST | 6 |

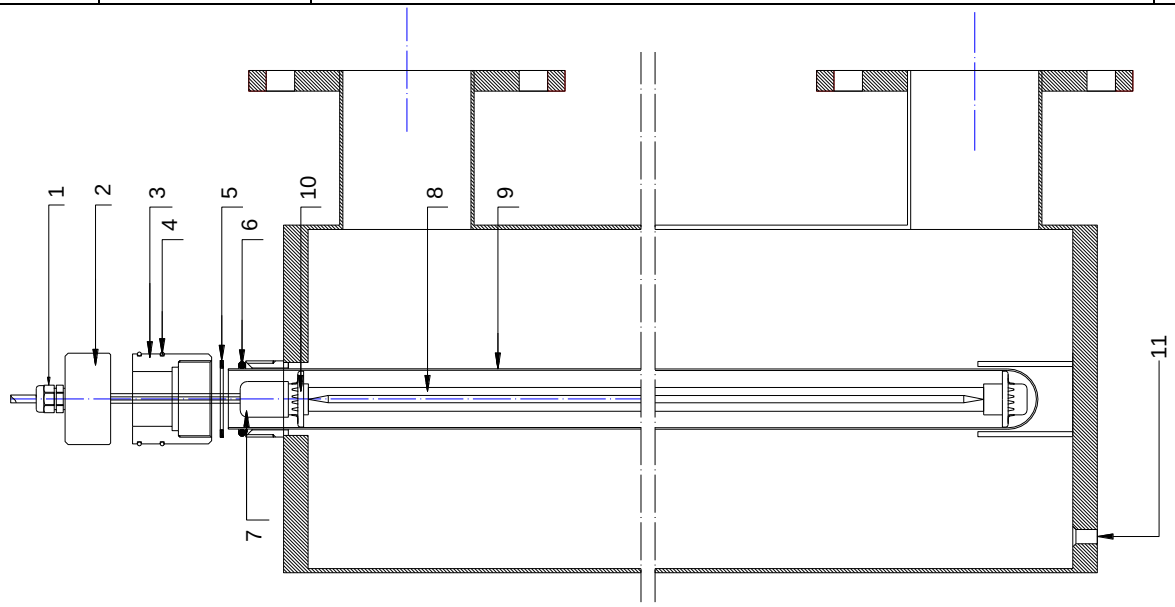


| | PART | SYMBOL | AMX0 | AMX1 | AMX2 | AMX3 | AMX4 | AMX5 | AMX6 | AMX8 | AMX10 | AMX12 | AMX16 |
|---|---|---|---|---|---|---|---|---|---|---|---|---|---|
| 1 | STRAIN RELIEF | 02.01 | 1 pcs. | 1 pcs. | 2 pcs. | 3 pcs. | 4 pcs. | 5 pcs. | 6 pcs. | 8 pcs. | 10 pcs. | 12 pcs. | 16 pcs. |
| 2 | LAMP HOOD | 01.02.02 | 1 pcs. | 1 pcs. | 2 pcs. | 3 pcs. | 4 pcs. | 5 pcs. | 6 pcs. | 8 pcs. | 10 pcs. | 12 pcs. | 16 pcs. |
| 3 | MUFF | 01.03.01 | 2 pcs. | 2 pcs. | 4 pcs. | 6 pcs. | 8 pcs. | 10 pcs. | 12 pcs. | 16 pcs. | 20 pcs. | 24 pcs. | 32 pcs. |
| 4 | O-RING MUFF | 01.04.01 | 1 pcs. | 1 pcs. | 2 pcs. | 3 pcs. | 4 pcs. | 5 pcs. | 6 pcs. | 8 pcs. | 10 pcs. | 12 pcs. | 16 pcs. |
| 5 | WASHER | 01.05 | 1 pcs. | 1 pcs. | 2 pcs. | 3 pcs. | 4 pcs. | 5 pcs. | 6 pcs. | 8 pcs. | 10 pcs. | 12 pcs. | 16 pcs. |
| 6 | O-RING | 01.06 | 1 pcs. | 1 pcs. | 2 pcs. | 3 pcs. | 4 pcs. | 5 pcs. | 6 pcs. | 8 pcs. | 10 pcs. | 12 pcs. | 16 pcs. |
| 7 | SOCKET | 03.08 | 1 pcs. | 1 pcs. | 2 pcs. | 3 pcs. | 4 pcs. | 5 pcs. | 6 pcs. | 8 pcs. | 10 pcs. | 12 pcs. | 16 pcs. |
| 8 | UV LAMP | 13.07 | 1 pcs. | 1 pcs. | 2 pcs. | 3 pcs. | 4 pcs. | 5 pcs. | 6 pcs. | 8 pcs. | 10 pcs. | 12 pcs. | 16 pcs. |
| 9 | QUARTZ SLEEVE | 13.09 | 1 pcs. | 1 pcs. | 2 pcs. | 3 pcs. | 4 pcs. | 5 pcs. | 6 pcs. | 8 pcs. | 10 pcs. | 12 pcs. | 16 pcs. |
| 10 | CENTERING RING | 01.15 | 2 pcs. | 2 pcs. | 4 pcs. | 6 pcs. | 8 pcs. | 10 pcs. | 12 pcs. | 16 pcs. | 20 pcs. | 24 pcs. | 32 pcs. |
| 11 | DRAIN VALVE | 01.12 | 1 pcs. | 1 pcs. | 1 pcs. | 1 pcs. | 1 pcs. | 1 pcs. | 1 pcs. | 1 pcs. | 1 pcs. | 1 pcs. | 1 pcs. |

## 16. HYGIENIC CERTIFICATE

NARODOWY INSTYTUT ZDROWIA PUBLICZNEGO PZH
– Państwowy Instytut Badawczy
National Institute of Public Health NIH – National Research Institute

PRODUKT Z ATESTEM

**ATEST HIGIENICZNY** **B.BK.60110.1415.2022**

**HYGIENIC CERTIFICATE** ORYGINAŁ

**NATIONAL INSTITUTE OF PUBLIC HEALTH NIH – NATIONAL RESEARCH INSTITUTE**

Wyrób / product: **Sterylizatory UV seria AMX**

Zawierający / containing: komorę ze stali kwasoodpornej AISI 316/316L, układ sterowniczy, niskociśnieniowe amalgamatowe promienniki UV-C, osłony z kwarcu, uszczelnienie EPDM

Przeznaczony do / destined: dezynfekcji wody przeznaczonej do spożycia przez ludzi i na potrzeby gospodarcze, wody basenowej, technologicznej, ścieków komunalnych

Wymieniony wyżej produkt odpowiada wymaganiom higienicznym przy spełnieniu następujących warunków / the above-named product is acceptable according to hygienic criteria with the following conditions:

Typ urządzenia należy dobierać w zależności od jakości wody w danym wodociągu i wymogów użytkownika. Do urządzenia należy dołączyć instrukcję użytkowania zawierającą informacje o zalecanej szybkości przepływu wody. Na stosowanie lamp UV do dezynfekcji wody przeznaczonej do spożycia w wodociągach publicznych oraz w pływalniach publicznych, należy każdorazowo uzyskać zgodę terenowo właściwego Inspektora Sanitarnego.
Atest higieniczny nie dotyczy parametrów technicznych i walorów użytkowych wyrobów/ Hygienic certificate does not apply to technical parameters and utility value.

Wytwórca / producer:
TMA Tomasz Adamowicz
15-592 Białystok
Białostoczek 26, gm. Zabłudów

Niniejszy dokument wydano na wniosek / this certificate issued for:
TMA Tomasz Adamowicz
15-592 Białystok
Białostoczek 26, gm. Zabłudów

**Atest może być zmieniony lub unieważniony po przedstawieniu stosownych dowodów przez którąkolwiek stronę. Niniejszy atest traci ważność po 2025.12.05 lub w przypadku zmian w recepturze albo w technologii wytwarzania wyrobu.**

**The certificate may be corrected or cancelled after appropriate motivation. The certificate loses its validity after2025.12.05 or in the case of changes in composition or in technology of production.**

Data wydania atestu higienicznego: 5 grudnia 2022

The date of issue of the certificate: 5th December 2022

*Kierownik*
*Zakładu Bezpieczeństwa Zdrowotnego Środowiska*
z up. Maciej Szroka
*dr hab. Jolanta Solecka, prof. NIZP PZH-PIB*

Kontakt w sprawie niniejszego atestu higienicznego / To contact regarding this hygienic certificate
Zakład Bezpieczeństwa Zdrowotnego Środowiska NIZP PZH - PIB / Department of Environmental Health and Safety NIPH NIH - NRI
00-791 Warszawa, ul.Chocimska 24 / 00-791 Warsaw, Chocimska 24, Poland
e-mail: sekretariat-bk@pzh.gov.pl tel. +48 22 54-21-354, +48 22 54-21-349

## 17. DECLARATION OF CONFORMITY

Made in Poland

**STERYLIZATORY UV**
*UV WATER STERILIZER*

Białostoczek, 2022-01-01

**Deklaracja zgodności TMA/01/03/2022**
Declaration of conformity

1. Producent wyrobu /
The manufactured of the product: TMA
Białostoczek 26, gm. Zabłudów
15-592 Białystok
Polska / Poland

Zakład produkcyjny: TMA
Białostoczek 26, gm. Zabłudów
15-592 Białystok
Polska / Poland

Deklaruje, że produkty / Hereby declares that the sterilisers:

2. Nazwa wyrobu / Models: Sterylizator / Steriliser
**SERIA/SERIES V/ SERIA D**
**SERIA/SERIES AM / AP-POOL**
**SERIA/SERIES AMX / AP-POOL X**
**CZUJNIK UV UVC-02/UV METER UVC-02**
3. Klasyfikacja wyrobu / Product classification:
SWW 0719-149, PKWiU28.29.12.0 (29.24.12-30.20)
4. Przeznaczenie i zakres stosowania wyrobu / The scope of use:
Dezynfekcja promieniami UV wody pitnej, grzewczej, basenowej, wód technologicznych.
/ UV desinfection of notable, heating, pool and technological waters.
5. Dokumenty odniesienia / Reference documents:
**2014/35/UE** / w miejsce / it replaces 2006/95/WE/
Dyrektywa niskonapięciowa / Low Voltage Directive
**2014/30/UE** /w miejsce 2004/108/WE/
Kompatybilność elektromagnetyczna /
Electromagnetic Compatibility Directive
**2014/68/UE** /w miejsce / it replaces 97/23/WE/
Urządzenia ciśnieniowe / Pressure Equipment Directive
**EN 605529** Stopnie ochrony zapewniane przez obudowy /
Degrees of casings' protection.

zostały zaprojektowane zgodnie z zasadami dobrej praktyki inżynierskiej.
/ are designed in accordance with good engineering practice./

Deklaruję z pełną odpowiedzialnością, że wyroby z partii określonej w pkt.2 są zgodne z dokumentami odniesienia wymienionymi w pkt 5.
/I hereby declare with full responsibility that the products from the lot determined in the declaration comply with the reference documents defined In p. 5./

Partia wyrobów objęta deklaracją./The lot determinated in the declaration.: 23000 - 26000

15-592 Białystok
Białostoczek 26
gm. Zabłudów
NIP 542-000-84-13, Regon 002333645
tel. +48 85 7431246, e-mail: biuro@tma.pl

Mgr inż. *Tomasz Adamowicz*
Właściciel firmy „TMA"
/The owner of the company/

## GRAFICAL MOUNTING INSTRUCTION

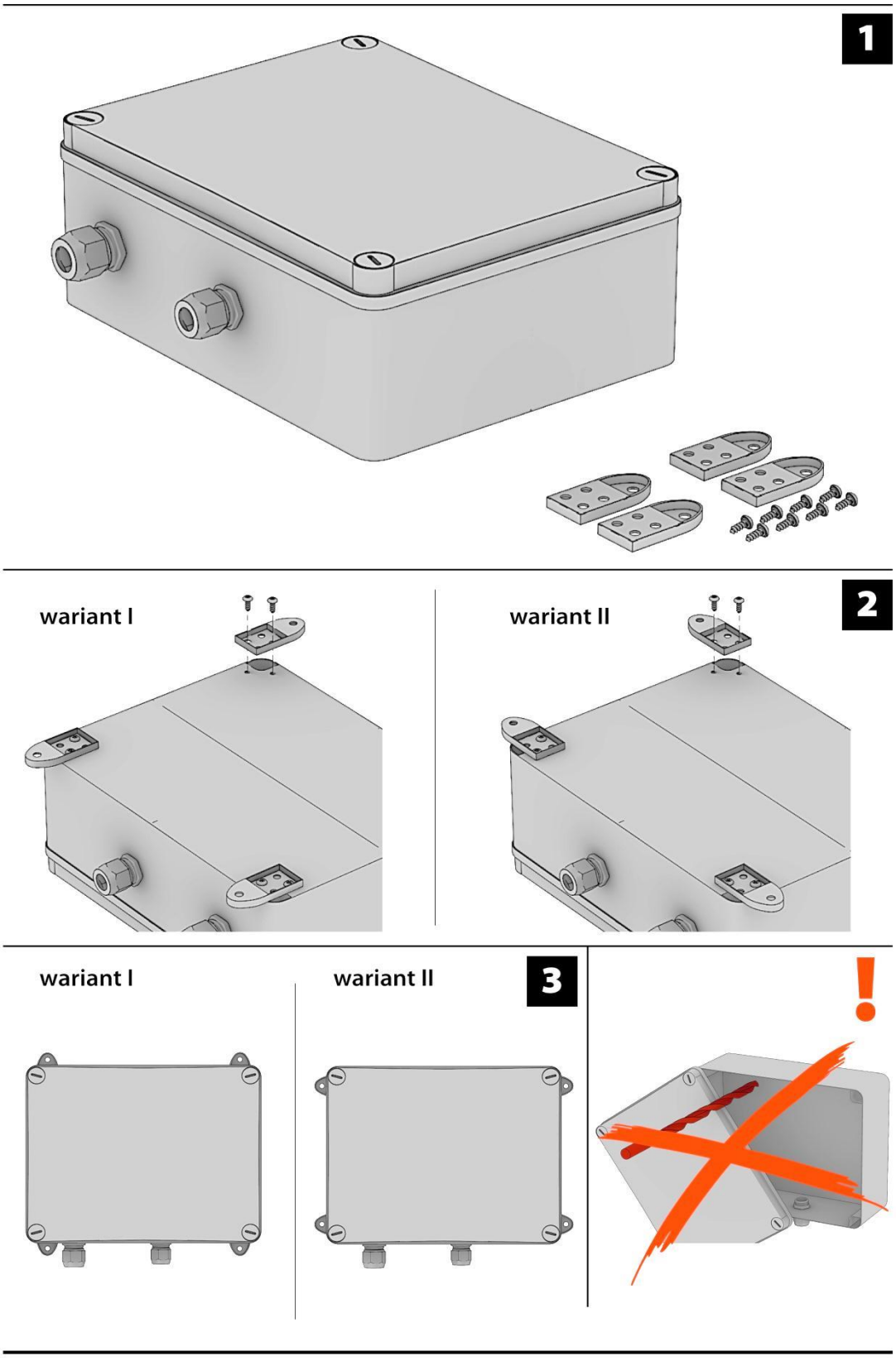

## Assemble of AMX sterilizer

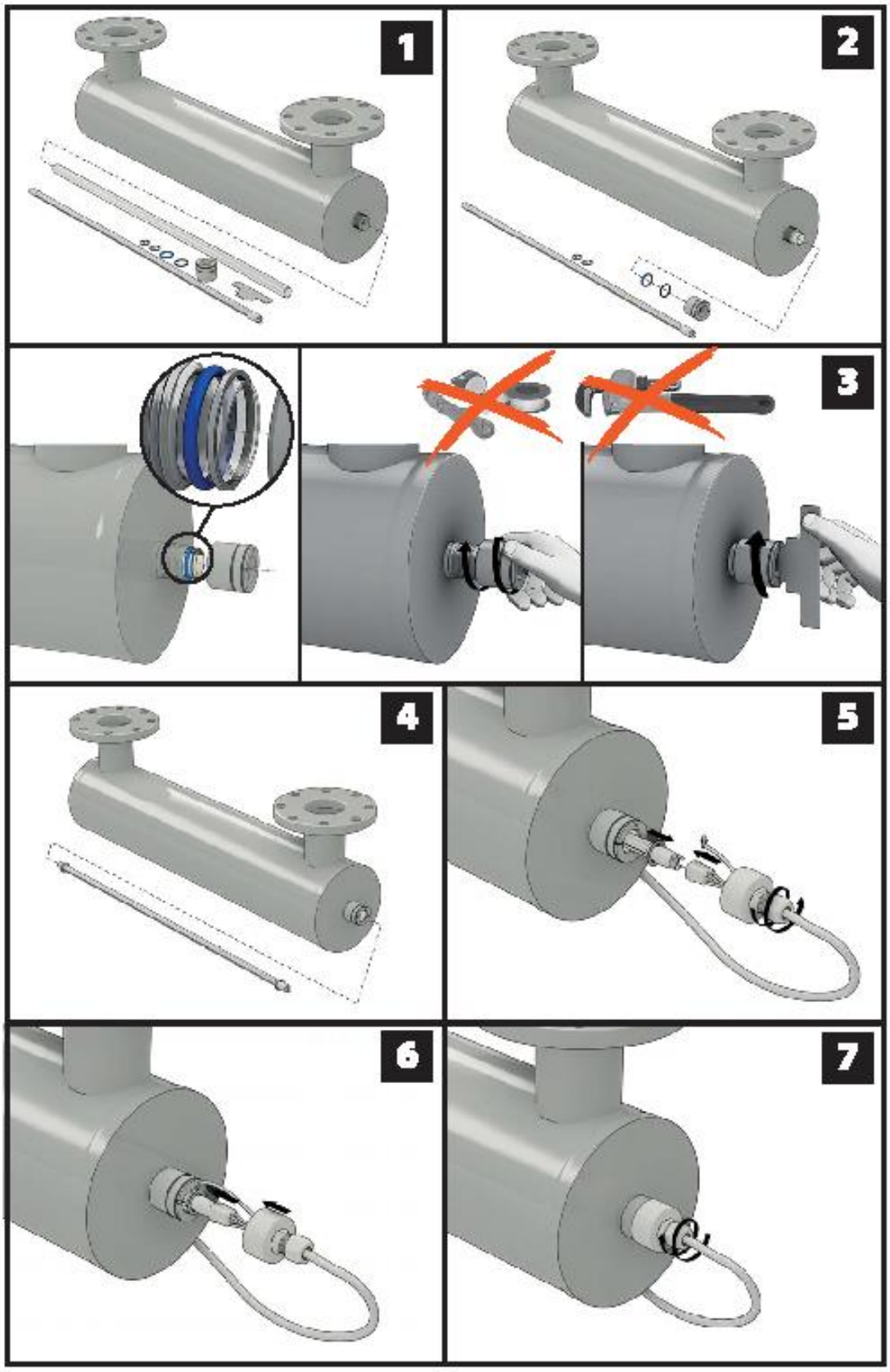

## Assemble of UV lamps in AMX chamber


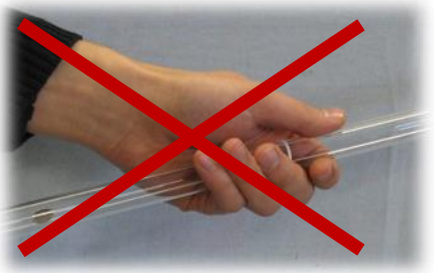




## 18. WARRANTY

1. UV sterilizers are exclusively for treatment of water/liquids which content is known.
2. The manufacturer of the UV sterilizers - the TMA company guarantees efficient operation of the equipment covered by this warranty card.
3. In order to obtain warranty service during the warranty period it is essential to:
    - Possess a document confirming the purchase of the equipment (purchase invoice, receipt)
    - Perform installation and operation of the device in accordance with the instructions found in the manual (included with the device).
4. All defects of the product determined at any time during this Warranty shall be repaired at no additional charge within 14 days from the date of delivery of the defective product to the manufacturer, based on this filled Warranty. In exceptional situations, this period can be extended to 21 days.
5. Defective equipment/product shall be delivered **COMPLETE** and appropriately packaged and secured for transport. We reserve the right to refuse to recognize a claim for damage and components resulting from poor security of goods in transport.
6. During the warranty period, the supplier repairs or replaces parts of the equipment, in that order, as appropriate, in accordance with the law, without any additional cost to the buyer. Products and parts replaced during warranty become the property of the manufacturer.
7. In the case of unfounded warranty claims, the claimant will be charged with any costs relating to the services performed, e.g. transport.
8. Installation and commissioning of the equipment can be made by the buyer following the instructions in the manual that came with this product
9. Manufacturer warrants that the product shall meet all specifications of performance as stated in the Manual for the period of:
    - 36 months from the date of purchase covering the stainless steel chamber
    - 24 months from the date of purchase covering all electrical parts of the sterilizer
10. The chamber is covered by Warranty for 36 months, as long as it is used for substance disinfection, in accordance with the steel corrosion resistance list, according to EN 10088-1 norm.
11. The use of the product not in accordance with the EN 10088-1 norm shall result in the loss of Warranty for the chamber and cannot be grounds for any claims in case of chamber damage.
12. The water flowing through the device cannot contain sulphur, solid substances that can be filtered or iron over 0.3 mg/dm3.
13. No warranty is given for the chambers made from AISI 304 stainless steel in the case of:
    - Chlorinated water with chlorine content greater than 0.3 mg/dm$^3$, e.g. in swimming pools
    - The contents of chlorides greater than 200 mg/dm3
    - pH outside the range 6.5-9.5
    - application for brine water above 250 mg/dm3 NaCl
    - application to demineralized and distilled water

No warranty is given for the chambers made from AISI 316 stainless steel in the case of:

- Chlorinated water with chlorine content greater than 1,0 mg/dm$^3$
- The contents of chlorides greater than 450 mg/dm3
- pH outside the range 6.5-9.5
- Application for brine water above 800 mg/dm3 NaCl

14. The purchaser shall have the right to have the product replaced if:
    - It is determined that there is a manufacturing defect which is irreparable; or
    - During the Warranty period there is a need of 4 repairs and even after these the exploitation of the product according to the instructions is impossible.
15. The term ‘repair’ does not cover all the actions stipulated in the Manual (i.e. routine maintenance) which are to be performed by the user.
16. The Warranty does not include:
    - Damage caused by inadequate storage of the products by the purchaser
    - Damage caused by faulty assembly or exploitation of the sterilizer

- Damage caused as a result of nonreliance on the instructions for assembly, use, transport or handling entered in the user manual
- Damage caused by unforeseen natural phenomena, i.e. floods, frost, storms, hurricanes or earthquakes
- Burning UV radiator
- Quartz casing
- Parts subject to aging/ wear, e.g. rings, gaskets, electrical cables, etc.

17. The manufacturer is released from liability under the guarantee in the following cases:
    - If during the warranty period the device is changed / repaired by persons not authorized by the manufacturer of the equipment - the TMA company
    - If the unit is powered by voltage of character and value other than defined in the manual.
    - If the appliance is used for purposes and in a manner inconsistent with the recommendations applicable in the manual, data sheet, warranty card.
    - Damage caused by unforeseen natural phenomena, i.e. floods, frost, storms, hurricanes or earthquakes
    - If the purchaser does not possess any documents proving the purchase of the equipment or a valid warranty card signed by the manufacturer / reseller
    - The unit has no markings left by the manufacturer
18. This Warranty is limited to the obligations stated above and does not cover the effects of damage caused by break-downs of the appliance or disinfection efficiency.
19. The manufacturer shall not be liable for any financial loss or other civil law consequences resulting from any defects of the device. It specifically relates to: loss of turnover, profit, possible benefits, damage of products and media.
20. Warranty claims may relate only to the replacement or repair of defective parts of UV sterilizers

**THE WARRANTY SHALL NOT COVER DEVICES NOT BEARING THE TMA LOGO.**

| Warranty and post warranty repairs | | |
|---|---|---|
| Receive date | Type of failure and repair procedure | End date of repair |
| | | |
| | | |
| | | |
| | | |